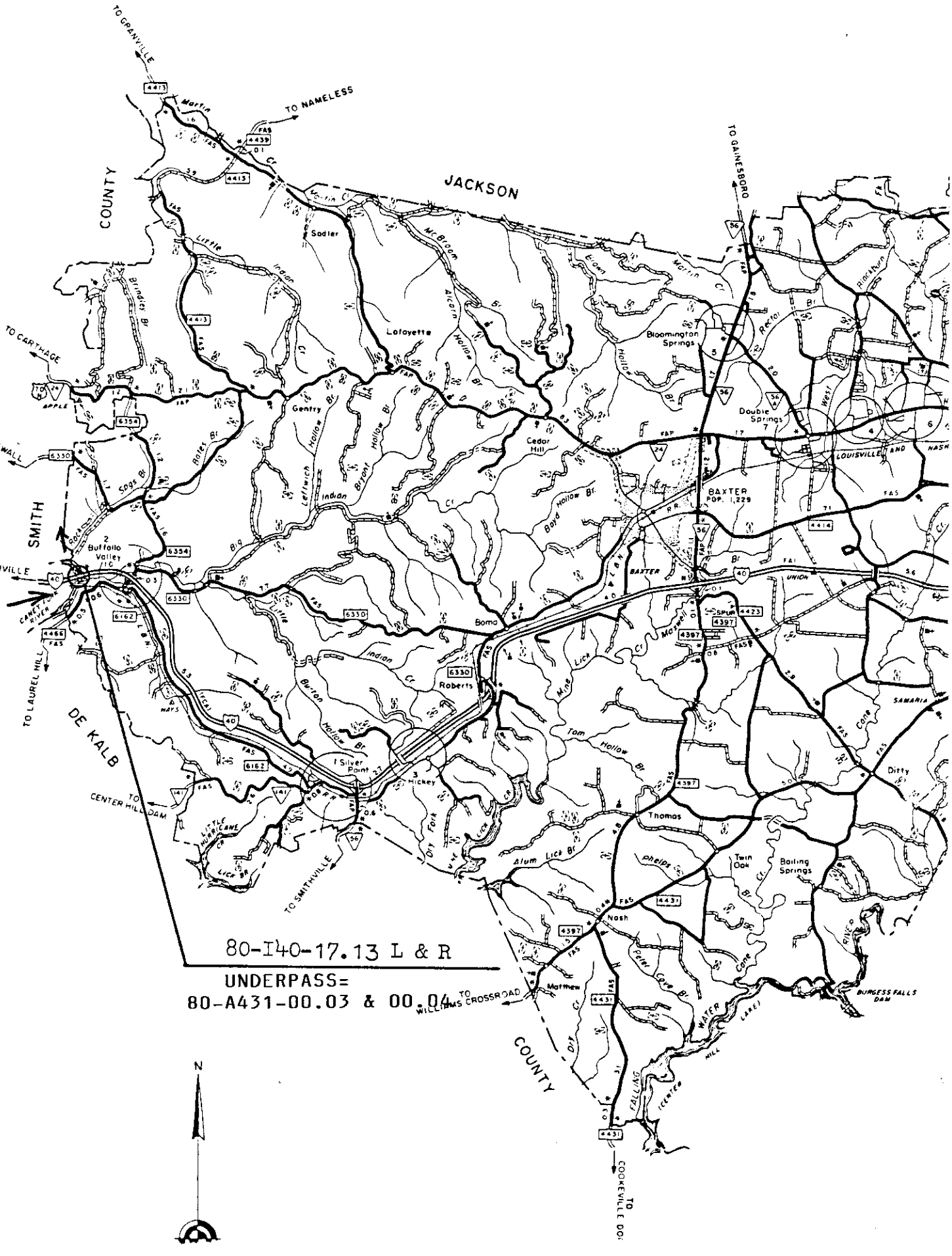

80-I40-17.13 L & R

UNDERPASS=

80-A431-00.03 & 00.04

Bridge Maintenance Recommendations

Bridge Location No.: 80 - I0040 - 17.13 L
Co. Route Log Mile

Crossing: CANEY FORK RIV & NFA A43*

Bridge Rating: GOOD

Inspection Cycle: 16

Inspection Date: 4/28/2003

Comments: REMOVE DRIFT.

Bridge Number: 80I00400036

County: Smith

Region: 03

District: 32

Maint.Resp.: 01

Spec.Case: 0

Co.Seq: 01

Maintenance Recommendations:

Maintenance Completed By / Date

COMPLETION NOTIFICATION: RETURN WITHIN 6 MONTHS OF INSPECTION DATE.

INITIAL AND DATE RECOMMENDATIONS WHEN COMPLETED.

MAINTENANCE ACTIVITIES ARE COMPLETED (DATE) _____ BY_____

MAINTENANCE ACTIVITIES ARE PARTIALLY COMPLETED (DATE) _____ BY_____

MAINTENANCE ACTIVITIES ARE INCOMPLETE, SCHEDULED FOR (DATE) _____

EXPLANATIONS AND COMMENTS:

CONTACT:

MR. RAY MCCLELLAND **D.O.T. BRIDGE INSPECTION** **6601 CENTENNIAL BLVD.** **NASHVILLE, TN 37243**	**MR. DON GREER** **D.O.T. BRIDGE INSPECTION** **6601 CENTENNIAL BLVD.** **NASHVILLE, TN 37243**

Bridge Maintenance Recommendations

Bridge Location No.: 80 - I0040 - 17.13 L
Co. Route Log Mile

Crossing: CANEY FORK RIV & NFA A43*

Bridge Rating: GOOD

Inspection Cycle: 15

Inspection Date: 6/13/01

Comments: REMOVE DRIFT.

Bridge Number: 80I00400036
County: Smith
Region: 03
District: 32
Maint.Resp.: 01
Spec.Case: 0
Co.Seq: 01

Maintenance Recommendations:

Maintenance Completed By / Date

XXXXXXXX

COMPLETION NOTIFICATION: RETURN WITHIN 6 MONTHS OF INSPECTION DATE.

INITIAL AND DATE RECOMMENDATIONS WHEN COMPLETED.

MAINTENANCE ACTIVITIES ARE COMPLETED (DATE) _____ BY_____

MAINTENANCE ACTIVITIES ARE PARTIALLY COMPLETED (DATE) _____ BY_____

MAINTENANCE ACTIVITIES ARE INCOMPLETE, SCHEDULED FOR (DATE) _____

EXPLANATIONS AND COMMENTS:

CONTACT:

MR. RAY MCCLELLAND
D.O.T. BRIDGE INSPECTION
6601 CENTENNIAL BLVD.
NASHVILLE, TN 37243

MR. DON GREER
D.O.T. BRIDGE INSPECTION
6601 CENTENNIAL BLVD.
NASHVILLE, TN 37243

BRIDGE MAINTENANCE RECOMMENDATIONS

BRIDGE SEQ. NO. : 80I00400036 BRIDGE NO. : 80 - I0040 - 1713 - L
OVER : CANEY FORK RIV & NFA A43*

DATE	: 06/17/99	BRIDGE RATING	: GOOD	COUNTY	: Smith
CO. SEQ.	: 01	INSPECTION CYCLE	: 14	MAINT DIST	: 32
SPEC. CASE	: 1	INSPECTION DATE	: 06/17/99	REGION	: 03

007 - FACILITY CARRIED BY STRUCT : I40
021 - MAINTENANCE RESPONSIBILITY : 01
022 - OWNER : 01
042 - TYPE OF STRUCTURE : 16
043 - STRUCTURE TYPE, MAIN : 505
044 - STRUCTURE TYPE, APPROACH : 000
045 - SPANS, MAIN UNIT : 004
046 - SPANS, APPROACH : 0000
049 - STRUCTURE LENGTH : 000320
032 - APPROACH ROADWAY WIDTH : 038
034 - SKEW : 90
051 - BRDG RDWY WID, CRB-TO-CRB : 0420
052 - DECK WIDTH, OUT-TO-OUT : 0440
500 - HWY OF THE INVENTORY ROUTE : 01

: MAINTENANCE & REPAIR RECOMMENDATIONS : : MAINTENANCE COMPLETED :

1 XXXXXXXX 1 BY ____ DATE _____

: COMMENTS FOR BRIDGE SEQ. NO. : 80I00400036 :

REMOVE DRIFT.

COMPLETION NOTIFICATION : RETURN WITHIN 6 MONTHS OF INSPECTION DATE

MAINTENANCE ACTIVITIES ARE
--- COMPLETED (DATE) --------
--- PARTIALLY COMPLETE (DATE) --------
--- INCOMPLETE SCHEDULED FOR (DATE) --------

EXPLANATIONS AND COMMENTS:

STATE OF TENNESSEE
DEPARTMENT OF TRANSPORTATION

Bridge Condition Coding Form

Revised 06/15/2000

County:	80
Route:	I0040
Special Case:	0
County Sequence:	01
Log Mile:	17.13

Bridge Number: (Includes Item 5A) 80I004000361

Feature Intersected: CANEY FORK RIV & NFA A43

CODE ONLY THOSE VALUES WHICH HAVE CHANGED

ITEM #	DESCRIPTION	VALUE
90	INSPECTION DATE	06/13/2001
		4 / 28 / 2003
10	MINIMUM V.C. OVER DECK (ROADWAY + SHOULDERS)	99 FT. 99 IN.
		____ FT. ____ IN.
520	MINIMUM V.C. OVER DECK (EXCLUDES SHOULDERS)	99 FT. 99 IN.
		____ FT. ____ IN.
36	TRAFFIC SAFETY FEATURES	
	Br. Rail / Trans. / Appr. Rail / Appr. Rail Ends	1 / 1 / 1 / 1
		___ / ___ / ___ / ___
41	STRC OPEN/CLOSED/POSTED	A
	A / K / P	___
58	DECK	7
		___
59	SUPERSTRUCTURE	7
		___
60	SUBSTRUCTURE	7
		___
61	CHANL/CHANL PROTECTION	7
		___
62	CULVERT AND RETAIN WALL	N
		___
71	WATERWAY ADEQUACY	6
		___
72	APPROACH RDWY ALIGNMENT (USE VALUES OF 3, 6, OR 8)	8
		___
521	OVERALL CONDITION (Circle One)	
	GOOD FAIR POOR CRITICAL	

Gilbert Wayne Hunter — TEAM LEADER SIGNATURE

4/28/2003 — REVIEW DATE

CONDITION CODING GUIDELINES
(Values for Coding Items 58, 59, 60 and 62)

- N NOT APPLICABLE
- 9 EXCELLENT CONDITION
- 8 VERY GOOD CONDITION - NO PROBLEMS NOTED.
- 7 GOOD CONDITION - SOME MINOR PROBLEMS.
- 6 SATISFACTORY CONDITION - MINOR DETERIORATION OF STRUCTURAL ELEMENTS.
- 5 FAIR CONDITION - ALL PRIMARY STRUCTURAL ELEMENTS ARE SOUND BUT MAY HAVE MINOR SECTION LOSS, CRACKING, SPALLING OR SCOUR.
- 4 POOR CONDITION - ADVANCED SECTION LOSS, DETERIORATION, SPALLING OR SCOUR.
- 3 SERIOUS CONDITION - LOSS OF SECTION, DETERIORATION, SPALLING OR SCOUR HAVE SERIOURSLY AFFECTED PRIMARY STRUCTURAL COMPONENTS. LOCAL FAILURES ARE POSSIBLE. FATIGUE CRACKS IN STEEL OR SHEAR CRACKS IN CONCRETE MAY BE PRESENT.
- 2 CRITICAL CONDITION - ADVANCED DETERIORATION OF PRIMARY STRUCTURAL ELEMENTS. FATIGUE CRACKS IN STEEL OR SHEAR CRACKS IN CONCRETE MAY BE PRESENT OR SCOUR MAY HAVE REMOVED SUBSTRUCTURE SUPPORT. UNLESS CLOSELY MONITORED IT MAY BE NECESSARY TO CLOSE THE BRIDGE UNTIL CORRECTIVE ACTION IS TAKEN.
- 1 "IMMINENT" FAILURE CONDITION - MAJOR DETERIORATION OR SECTION LOSS PRESENT IN CRITICAL STRUCTURAL COMPONENTS OR OBVIOUS VERTICAL OR HORIZONTAL MOVEMENT AFFECTING STRUCTURAL STABILITY. BRIDGE IS CLOSED TO TRAFFIC BUT CORRECTIVE ACTION MAY PUT BACK IN LIGHT SERVICE.
- 0 FAILED CONDITION - OUT OF SERVICE AND BEYOND CORRECTIVE ACTION.

STATE OF TENNESSEE
DEPARTMENT OF TRANSPORTATION

Underpass Only* Condition Coding Form

Revised 06/15/2000

County: 80
Route: 0A431
Special Case: 0
County Sequence: 01
Log Mile: 0004

Bridge Number: (Includes Item 5A) 80I00400036

Feature Intersected: I40 Rest Area Ramp

CODE ONLY THOSE NUMBERS WHICH HAVE CHANGED

ITEM #	DESCRIPTION	Previous - 6/13/01	VALUE
90	INSPECTION DATE		4-28-03
10	MINIMUM V.C. OVER DECK (ROADWAY + SHOULDERS)	15 FT. 0 IN.	
520	MINIMUM V.C. OVER DECK (EXCLUDES SHOULDERS)	15 FT. 0 IN.	
47	TOTAL HORIZONTAL UNDERCLEARANCE	44 FT. 3 IN.	

UNDERPASS SAFETY FEATURES

515 (A) TYPE UNDERPASS BARRIER

Revised Barrier Type

(B) ADEQUACY OF BARRIER OR RAIL

(C) ADEQUACY OF TRANSITIONS

(D) ADEQUACY OF TERMINALS

* Use when no overhead vehicular traffic bridge exists. Items 55 and 56 do not apply.

521 OVERALL CONDITION (Circle One)

GOOD FAIR POOR CRITICAL

HEIGHT POSTED AT BOTH APPROACHES? YES [✓] NO [ ] N/A [ ]

NOTE: DESCRIBE ANY PROBLEMS ON BRIDGES THAT THE STATE DOES NOT INSPECT (SUCH AS RAILROAD OR PRIVATE BRIDGES) THAT WOULD AFFECT THE ROADWAY SUCH AS LOOSE MEMBERS, SEVERELY SPALLED OR CRACKED CONCRETE, EXCESSIVE SECTION LOSS ON STEEL, EXCESSIVE TIMBER DECAY, ETC. ALSO, DESCRIBE ANY UNSAFE ITEMS.

555 COMMENTS

Gilbert Wayne Hunter — TEAM LEADER SIGNATURE

4/28/03 — REVIEW DATE

STATE OF TENNESSEE
DEPARTMENT OF TRANSPORTATION

Bridge Condition Coding Form

Revised 06/15/2000

County:	80
Route:	I0040
Special Case:	0
County Sequence:	01
Log Mile:	17.13

Bridge Number: (Includes Item 5A) 80I004000361

Feature Intersected: CANEY FORK RIV & NFA A43

CODE ONLY THOSE VALUES WHICH HAVE CHANGED

ITEM #	DESCRIPTION	VALUE
90	INSPECTION DATE	06/17/1999
		6 1 3 1 0 1
10	MINIMUM V.C. OVER DECK (ROADWAY + SHOULDERS)	99 FT. 99 IN.
		___ FT. ___ IN.
520	MINIMUM V.C. OVER DECK (EXCLUDES SHOULDERS)	99 FT. 99 IN.
		___ FT. ___ IN.
36	TRAFFIC SAFETY FEATURES	
	Br. Rail / Trans. / Appr. Rail / Appr. Rail Ends	1 1 1 1
		___ ___ ___ ___
41	STRC OPEN/CLOSED/POSTED	A
	A K P	___
58	DECK	7
		___
59	SUPERSTRUCTURE	7
		___
60	SUBSTRUCTURE	7
		___
61	CHANL/CHANL PROTECTION	7
		___
62	CULVERT AND RETAIN WALL	N
		___
71	WATERWAY ADEQUACY	6
		___
72	APPROACH RDWY ALIGNMENT (USE VALUES OF 3, 6, OR 8)	8
		___
521	OVERALL CONDITION (Circle One)	
	GOOD FAIR POOR CRITICAL	

Dilbert Wayne Hunter — TEAM LEADER SIGNATURE

6/13/01 — REVIEW DATE

CONDITION CODING GUIDELINES
(Values for Coding Items 58, 59, 60 and 62)

- N NOT APPLICABLE
- 9 EXCELLENT CONDITION
- 8 VERY GOOD CONDITION - NO PROBLEMS NOTED.
- 7 GOOD CONDITION - SOME MINOR PROBLEMS.
- 6 SATISFACTORY CONDITION - MINOR DETERIORATION OF STRUCTURAL ELEMENTS.
- 5 FAIR CONDITION - ALL PRIMARY STRUCTURAL ELEMENTS ARE SOUND BUT MAY HAVE MINOR SECTION LOSS, CRACKING, SPALLING OR SCOUR.
- 4 POOR CONDITION - ADVANCED SECTION LOSS, DETERIORATION, SPALLING OR SCOUR.
- 3 SERIOUS CONDITION - LOSS OF SECTION, DETERIORATION, SPALLING OR SCOUR HAVE SERIOURSLY AFFECTED PRIMARY STRUCTURAL COMPONENTS. LOCAL FAILURES ARE POSSIBLE. FATIGUE CRACKS IN STEEL OR SHEAR CRACKS IN CONCRETE MAY BE PRESENT.
- 2 CRITICAL CONDITION - ADVANCED DETERIORATION OF PRIMARY STRUCTURAL ELEMENTS. FATIGUE CRACKS IN STEEL OR SHEAR CRACKS IN CONCRETE MAY BE PRESENT OR SCOUR MAY HAVE REMOVED SUBSTRUCTURE SUPPORT. UNLESS CLOSELY MONITORED IT MAY BE NECESSARY TO CLOSE THE BRIDGE UNTIL CORRECTIVE ACTION IS TAKEN.
- 1 "IMMINENT" FAILURE CONDITION - MAJOR DETERIORATION OR SECTION LOSS PRESENT IN CRITICAL STRUCTURAL COMPONENTS OR OBVIOUS VERTICAL OR HORIZONTAL MOVEMENT AFFECTING STRUCTURAL STABILITY. BRIDGE IS CLOSED TO TRAFFIC BUT CORRECTIVE ACTION MAY PUT BACK IN LIGHT SERVICE.
- 0 FAILED CONDITION - OUT OF SERVICE AND BEYOND CORRECTIVE ACTION.

Revised 06/15/2000

STATE OF TENNESSEE
DEPARTMENT OF TRANSPORTATION

Underpass Only* Condition Coding Form

County: 80
Route: 0A431
Special Case: 0
County Sequence: 01
Log Mile: 0004

Bridge Number: (Includes Item 5A) 80I00400036

Feature Intersected: I40/REST AREA RAMP

CODE ONLY THOSE NUMBERS WHICH HAVE CHANGED

ITEM #	DESCRIPTION	VALUE
90	INSPECTION DATE	6-13-01
10	MINIMUM V.C. OVER DECK (ROADWAY + SHOULDERS)	15 FT. 0 IN.
520	MINIMUM V.C. OVER DECK (EXCLUDES SHOULDERS)	15 FT. 0 IN.
47	TOTAL HORIZONTAL UNDERCLEARANCE	44 FT. 3 IN.

UNDERPASS SAFETY FEATURES

515 (A) TYPE UNDERPASS BARRIER _____
Revised Barrier Type

(B) ADEQUACY OF BARRIER OR RAIL ____

(C) ADEQUACY OF TRANSITIONS ____

(D) ADEQUACY OF TERMINALS ____

* Use when no overhead vehicular traffic bridge exists. Items 55 and 56 do not apply.

521 OVERALL CONDITION (Circle One)

GOOD FAIR POOR CRITICAL

HEIGHT POSTED AT BOTH APPROACHES? YES [ ] NO [X] N/A [ ]

NOTE: DESCRIBE ANY PROBLEMS ON BRIDGES THAT THE STATE DOES NOT INSPECT (SUCH AS RAILROAD OR PRIVATE BRIDGES) THAT WOULD AFFECT THE ROADWAY SUCH AS LOOSE MEMBERS, SEVERELY SPALLED OR CRACKED CONCRETE, EXCESSIVE SECTION LOSS ON STEEL, EXCESSIVE TIMBER DECAY, ETC. ALSO, DESCRIBE ANY UNSAFE ITEMS.

555 COMMENTS _____

Gilbert Wayne Hunter — TEAM LEADER SIGNATURE

6/13/01 — REVIEW DATE

STATE OF TENNESSEE
DEPARTMENT OF TRANSPORTATION

Bridge Condition Coding Form

County:	80
Route:	I0040
Special Case:	0
County Sequence:	1
Log Mile:	17.13

Bridge Number: (Includes Item 5A) 80I004000361

Feature Intersected: CANEY FORK RIV & NFA A43

CODE ONLY THOSE NUMBERS WHICH HAVE CHANGED

ITEM #	DESCRIPTION	VALUE
90	INSPECTION DATE	5/1/97
		6 / 17 / 199
10	MINIMUM V.C. OVER DECK (ROADWAY + SHOULDERS)	99 FT. 99 IN.
		___ FT. ___ IN.
520	MINIMUM V.C. OVER DECK (EXCLUDES SHOULDERS)	99 FT. 99 IN.
		___ FT. ___ IN.
54	MINIMUM VERTICAL UNDERCLEARANCE (EXCLUDES SHOULDERS)	H 14 FT. 11 IN.
	Circle One: H R N	15 FT. 00 IN.
36	TRAFFIC SAFETY FEATURES	
	Br. Rail / Trans. / Appr. Rail / Appr. Rail Ends	1 / 1 / 1 / 1
		___ / ___ / ___ / ___
41	STRC OPEN/CLOSED/POSTED	A
	A K P	___
58	DECK	7
		___
59	SUPERSTRUCTURE	7
		___
60	SUBSTRUCTURE	7
		___
61	CHANL/CHANL PROTECTION	7
		___
62	CULVERT AND RETAIN WALL	N
		___
72	APPROACH RDWY ALIGNMENT (USE VALUES OF 3, 6, OR 8)	8
		___

OVERALL CONDITION (Circle One)

GOOD FAIR POOR CRITICAL

Hilbert Wayne Hunter — SIGNATURE

6 / 17 / 99 — DATE

COMMENTS

RATINGS FOR CODING ITEMS 58, 59, 60 AND 62

N NOT APPLICABLE

9 EXCELLENT CONDITION

8 VERY GOOD CONDITION - NO PROBLEMS NOTED.

7 GOOD CONDITION - SOME MINOR PROBLEMS.

6 SATISFACTORY CONDITION - MINOR DETERIORATION OF STRUCTURAL ELEMENTS.

5 FAIR CONDITION - ALL PRIMARY STRUCTURAL ELEMENTS ARE SOUND BUT MAY HAVE MINOR SECTION LOSS, CRACKING, SPALLING OR SCOUR.

4 POOR CONDITION - ADVANCED SECTION LOSS, DETERIORATION, SPALLING OR SCOUR.

3 SERIOUS CONDITION - LOSS OF SECTION, DETERIORATION, SPALLING OR SCOUR HAVE SERIOURSLY AFFECTED PRIMARY STRUCTURAL COMPONENTS. LOCAL FAILURES ARE POSSIBLE. FATIGUE CRACKS IN STEEL OR SHEAR CRACKS IN CONCRETE MAY BE PRESENT.

2 CRITICAL CONDITION - ADVANCED DETERIORATION OF PRIMARY STRUCTURAL ELEMENTS. FATIGUE CRACKS IN STEEL OR SHEAR CRACKS IN CONCRETE MAY BE PRESENT OR SCOUR MAY HAVE REMOVED SUBSTRUCTURE SUPPORT. UNLESS CLOSELY MONITORED IT MAY BE NECESSARY TO CLOSE THE BRIDGE UNTIL CORRECTIVE ACTION IS TAKEN.

1 "IMMINENT" FAILURE CONDITION - MAJOR DETERIORATION OR SECTION LOSS PRESENT IN CRITICAL STRUCTURAL COMPONENTS OR OBVIOUS VERTICAL OR HORIZONTAL MOVEMENT AFFECTING STRUCTURAL STABILITY. BRIDGE IS CLOSED TO TRAFFIC BUT CORRECTIVE ACTION MAY PUT BACK IN LIGHT SERVICE.

0 FAILED CONDITION - OUT OF SERVICE AND BEYOND CORRECTIVE ACTION.

STATE OF TENNESSEE
DEPARTMENT OF TRANSPORTATION

Underpass Condition Coding Form

County: 80
Route: 0A431
Special Case: 0
County Sequence: 01
Log Mile: 0004

Bridge Number (Includes Item 5A): 80I00400036
Feature Intersected: I40/REST AREA RAMP

CODE ONLY THOSE NUMBERS WHICH HAVE CHANGED

ITEM #	DESCRIPTION	VALUE
90	INSPECTION DATE	6/17/99
10	MINIMUM V.C. OVER DECK (ROADWAY + SHOULDERS)	15 FT. 00 IN.
520	MINIMUM V.C. OVER DECK (EXCLUDES SHOULDERS)	15 FT. 00 IN.
47	TOTAL HORIZONTAL UNDERCLEARANCE	442 FT. 00 IN.
55	MINIMUM LATERAL UNDERCLEARANCE ON RIGHT SIDE Circle One: H R N	4 FT. 00 IN.
56	MINIMUM LATERAL UNDERCLEARANCE ON LEFT SIDE	6 FT. 00 IN.

UNDERPASS SAFETY FEATURES

(A) TYPE UNDERPASS BARRIER

Revised Barrier Type

(B) ADEQUACY OF BARRIER OR RAIL

(C) ADEQUACY OF TRANSITIONS

(D) ADEQUACY OF TERMINALS

VERTICAL CLEARANCE LISTED ON HEIGHT POSTING SIGNS

FT. IN.

OVERALL CONDITION (Circle One)

GOOD FAIR POOR CRITICAL

HEIGHT POSTED AT BOTH APPROACHES? YES [ ] NO [ ] N/A [X]

NOTE: DESCRIBE ANY PROBLEMS ON BRIDGES THAT THE STATE DOES NOT INSPECT (SUCH AS RAILROAD OR PRIVATE BRIDGES) THAT WOULD AFFECT THE ROADWAY SUCH AS LOOSE MEMBERS, SEVERELY SPALLED OR CRACKED CONCRETE, EXCESSIVE SECTION LOSS ON STEEL, EXCESSIVE TIMBER DECAY, ETC. ALSO, DESCRIBE ANY UNSAFE ITEMS.

COMMENTS

Gilbert W. Hunter — SIGNATURE

6/17/99 — DATE

TENNESSEE BRIDGE INSPECTION PROGRAM
SUMMARY OF EVALUATION

REV. 03-05-2003

BRIDGE ID NO: 80I00400036 *LOCATION NO:* 80 - I0040 - 17.16 L

(6A) CROSSING: CANEY FORK RIV & NFA A43

(505) METHOD OF ANALYSIS: LOAD FACTOR METHOD

(548) RATING BASED ON: AASHTOWARE BRIDGE RATING (3.5" OF ASPHALT)

LOAD RATINGS IN TONS

INVENTORY (503) H	20	*(518B) HS*	36
OPERATING (504) H	45	*(519) HS*	58

(549) EVALUATOR: DCD

(522) EVAL. DATE: 8/16/2017

LAST UPDATED BY: DOMM

(29) ADT: 32,560 *(30) ADT YR:* 2018

(100) STRAHNET ROUTE: YES

(19) DETOUR LENGTH: 2 *KM*

(520) VC OVER RDWY: 99.99 *METERS*

CONDITION RATINGS

(58) DECK RATING:	7
(59) SUPERSTRUCTURE RATING:	7
(60) SUBSTRUCTURE RATING:	7
(61) CHANNEL PROTECTION:	7
(62) CULVERT RATING:	N
(113A) NBIS SCOUR CODE:	8
(113B) TDOT SCOUR CODE:	R

APPRAISAL RATINGS

(67) STRUCTURAL EVALUATION:	7
(68) DECK GEOMETRY:	8
(69) UNDER CLEARANCE:	4
(70) BRIDGE POSTING:	5
(71) WATERWAY ADEQUACY:	6
(72) APPROACH RDWY ALIGNMENT:	8

CODE VALUES

N - NOT APPLICABLE
9 - EXCELLENT CONDITION
8 - VERY GOOD CONDITION
7 - GOOD CONDITION
6 - SATISFACTORY
5 - FAIR CONDITION
4 - POOR CONDITION
3 - SERIOUS CONDITION
2 - CRITICAL CONDITION
1 - FAILURE IS IMMINENT
0 - FAILED CONDITION

OTHER RATING ITEMS

(521) OVERALL CONDITION:	G	
(513) TEXTURE COAT RATING:	G	10
(514) PAINT CONDITION RATING:	N	
(41) WEIGHT POSTING CODE:	A	

(36) TRAFFIC SAFETY FEATURES: 1 0 0 1

(525) REPAIR LIST NO: N

COMMENTS

NO COMMENTS AT THIS TIME.

(502) SUFF. RATING:	91.9
(528) STR. DEFICIENT:	NO
(529) FUNC. OBSOLETE:	NO

Bridge Name: I-40 OVER CANEY FORK RIVER AND NFA A43
NBI Structure ID: 80I00400036
Bridge ID: 80I00400036

Analyzed By: bridgeware
Analyze Date: Thursday, April 18, 2019 14:47:37
Analysis Engine: AASHTO LFR Engine Version 6.8.1.3001
Analysis Preference Setting: None

Report By: bridgeware
Report Date: Thursday, April 18, 2019 14:57:55

Structure Definition Name: 70' SPAN (NEW BEAMS)
Member Name: G9
Member Alternative Name: NEW INT

Load Factor Rating Summary

Girder Summary

Live Load		Rating Factor	Controls	Capacity (Ton)	Span	Location (ft)	Percent	Impact	Lane
H 15-44	Inventory	1.281	PS Tensile Stress - Concrete	19.22	1	34.63	50.0	As Requested	As Requested
H 15-44	Operating	2.992	Design Flexure - Concrete	44.88	1	34.63	50.0	As Requested	As Requested
HS 20-44	Inventory	0.691	PS Tensile Stress - Concrete	24.89	1	34.63	50.0	As Requested	As Requested
HS 20-44	Operating	1.614	Design Flexure - Concrete	58.11	1	34.63	50.0	As Requested	As Requested
Type 3S2	Inventory	0.870	PS Tensile Stress - Concrete	31.30	1	34.63	50.0	As Requested	As Requested
Type 3S2	Operating	2.030	Design Flexure - Concrete	73.08	1	34.63	50.0	As Requested	As Requested
	Inventory	0.572		47.18	1	34.63	50.0	As Requested	As Requested

Annual Permit 1			PS Tensile Stress - Concrete						
Annual Permit 1	Operating	1.335	Design Flexure - Concrete	110.15	1	34.63	50.0	As Requested	As Requested
Annual Permit 2	Inventory	0.440	PS Tensile Stress - Concrete	36.33	1	34.63	50.0	As Requested	As Requested
Annual Permit 2	Operating	1.028	Design Flexure - Concrete	84.82	1	34.63	50.0	As Requested	As Requested
Gravel Truck	Inventory	0.631	PS Tensile Stress - Concrete	23.33	1	34.63	50.0	As Requested	As Requested
Gravel Truck	Operating	1.472	Design Flexure - Concrete	54.47	1	34.63	50.0	As Requested	As Requested
Overweight Permit	Inventory	0.421	PS Tensile Stress - Concrete	53.68	1	34.63	50.0	As Requested	As Requested
Overweight Permit	Operating	0.983	Design Flexure - Concrete	125.33	1	34.63	50.0	As Requested	As Requested
EV2	Operating	1.913	Design Flexure - Concrete	55.00	1	34.63	50.0	As Requested	As Requested
EV3	Operating	1.228	Design Flexure - Concrete	52.79	1	34.63	50.0	As Requested	As Requested
SU6 LFR	Operating	1.583	Design Flexure - Concrete	55.00	1	34.63	50.0	As Requested	As Requested
SU7 LFR	Operating	1.450	Design Flexure - Concrete	56.17	1	34.63	50.0	As Requested	As Requested

Note:
"N/A" indicates not applicable
"**" indicates not available

Bridge No.: 80 — I0040 — 1713
Crossing:: CANEY FORK RIV & NFA A43*
Federal No.: 80I00400036 Date: April 28, 2003

PIC1

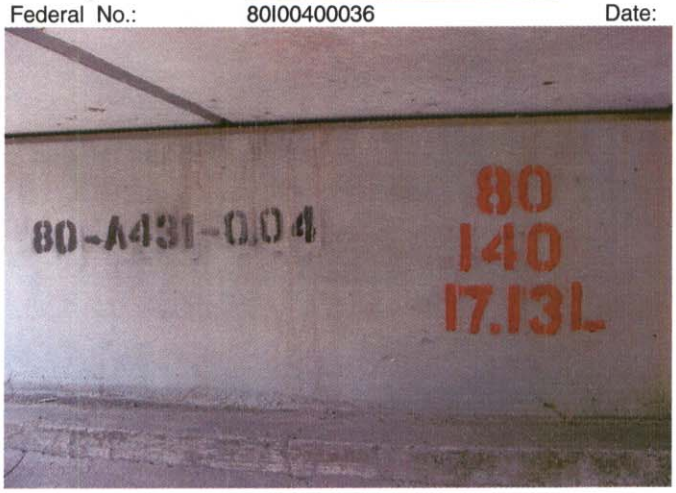

BRIDGE NO. AT ABUTMENT # 1

Bridge No.: 80 — I0040 — 1713
Crossing:: CANEY FORK RIV & NFA A43*
Federal No 80I00400036 Date: April 28, 2003

PIC2

VIEW ACROSS DECK FROM A-APR

PIC3

INLET-ELEV & R. SIDE APPR

Bridge No.: 80 — I0040 — 1713
Crossing:: CANEY FORK RIV & NFA A43*
Federal No.: 80I00400035 Date: June 13, 2001

PIC1

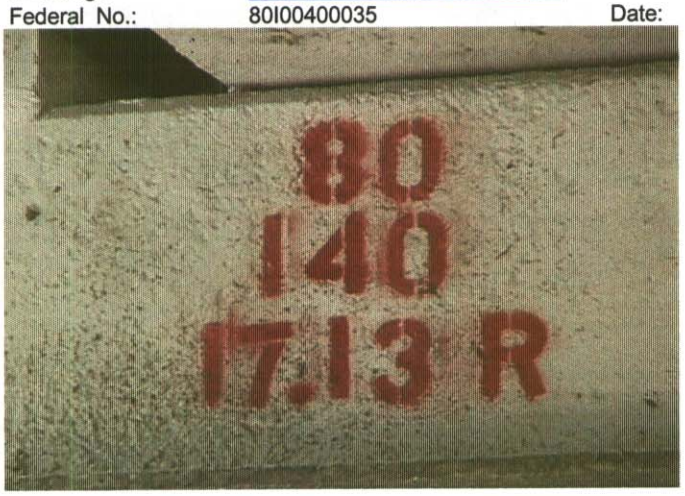

BRIDGE NO. AT ABUTMENT # 1

Bridge No.: 80 — I0040 — 1713
Crossing:: CANEY FORK RIV & NFA A43*
Federal N 80I00400035 Date: June 13, 2001

PIC2

VIEW ACROSS DECK

PIC3

RIGHT SIDE VIEW

Bridge No.: 80 — I0040 — 1713
Crossing:: CANEY FORK RIV & NFA A43*
Federal No.: 80I00400036 Date: July 1, 1999

PIC1

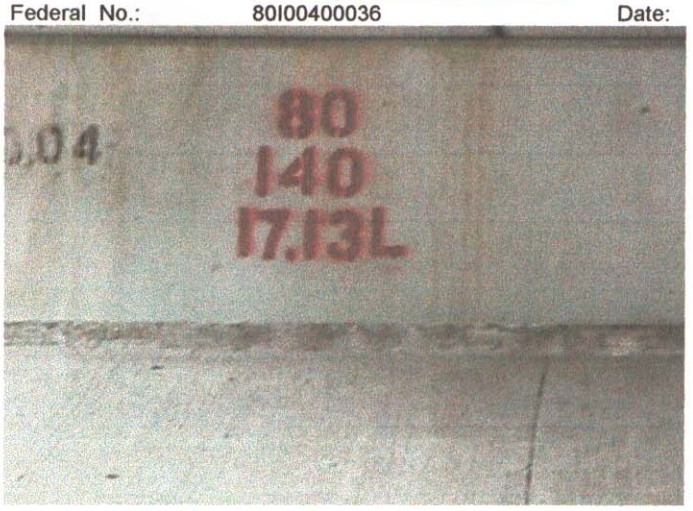

BRIDGE NO. AT ABUTMENT # 1

Bridge No.: 80 — I0040 — 1713
Crossing:: CANEY FORK RIV & NFA A43*
Federal No 80I00400036 Date: July 1, 1999

PIC2

BRIDGE NO. AT ABUTMENT # 1

0

Bridge No.: 80 — I0040 — 1713
Crossing:: CANEY FORK RIV & NFA A43*
Federal No.: 80I00400036 Date: June 17, 1999

PIC1

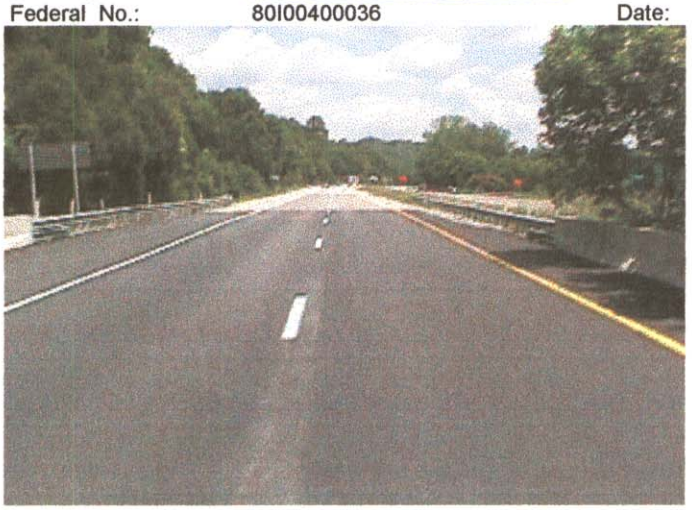

APPROACH #2

Bridge No.: 80 — I0040 — 1713
Crossing:: CANEY FORK RIV & NFA A43*
Federal No 80I00400036 Date: June 17, 1999

PIC2

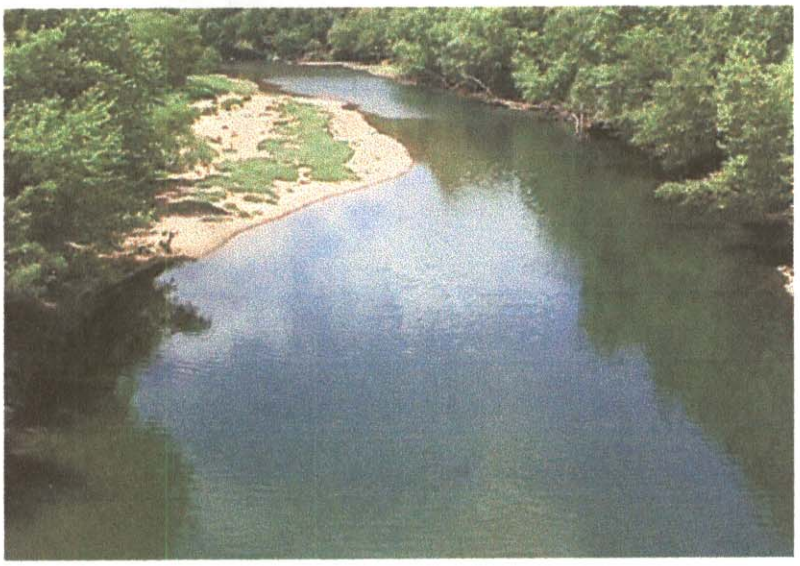

DOWNSTREAM

PIC3

APPROACH #1

Bridge No.: 80 — I0040 — 1713
Crossing:: CANEY FORK RIV & NFA A43*
Federal No.: 80I00400036 Date: June 17, 1999

PIC4

ACROSS TOP OF DECK

PIC5

ABUTMENT TYPICAL

Bridge No.: 80 — I0040 — 1713
Crossing:: CANEY FORK RIV & NFA A43*
Federal No.: 80I00400036 Date: June 17, 1999

PIC6

PIER TYPICAL

PIC7

ELEVATION INLET

Bridge No.: 80 — I0040 — 1713
Crossing:: CANEY FORK RIV & NFA A43*
Federal No.: 80I00400036 Date: June 17, 1999

PIC8

UPSTREAM

PIC9

BOTTOM OF DECK

ROUTINE BRIDGE INSPECTION REPORT

Page No.___

Form BIR 3.0C
(Rev. 9-22-98)
DT-1537

Field Report No. 16 Date 4-28-03
Previous Report No. 15 Date 6/13/2001
Plans: yes

Bridge No. 80I00400036 (Eleven Digit No.)
Bridge Location No. 80 - I0040 - 17.13 L (Co. Route Log Mile)

I 40 (Road Name) over CANEY FORK RIV & NFA A43* (Crossing)
Indepth Insp. Req'd: NO (If yes itemize limits under comment)

Structure Type PPCBB
FRACTURE CRITICAL: NO

FEATURE CHANGES:

Wearing Surface ___ Type ___ Depth ___ (in.)
Bridge Rail ___ Describe changes:
Approach Rail ___

CLEARANCE CHANGES: (If yes make changes below)

Vertical Clearance over deck ___ (ft.-in.)
Vertical Under Clearance ___ (ft.-in.)
Horizontal Under Clearance ___ (*.* ft.)
Deck Width Curb/Curb ___ (*.* ft.)
Deck Width Rail/Rail ___ (*.* ft.)
Sidewalk Width Rt. ___ Lt. ___

INSPECTORS

Hunter Thompson
Daniel
Crutcher
Waller

Condition: **GOOD** (If change describe in comments)

		Comments
Approaches	G	
Deck Condition (Item 58)	G	
Superstructure (Item 59)		
a. Beams	G	
b. Bearings	G	
c. Diaphragms	NA	
Substructure (Item 60)		
a. Caps/Bridge Seats	G	
b. Columns/Piles	G	
c. Footings	NV	
d. Wing W./Breast W.	G	
Scour/Erosion	G	
Channel (Item 61)	G	

UNDERWATER INSPECTION

To Be Performed By: None required
Date Underwater Insp. ___
BRIDGE is: Good

Weight Limit Posted NO
Gross..... ___ Tons
2 Axle..... ___ Tons
3 or more Axles.. ___ Tons

COMMENTS:

Supervising Bridge Inspector: Gilbert Wayne Hunter

BRIDGE RATING: **GOOD**

SUMMARY
80-I40-17.13 LT
4/28/2003

I40/Caney Fork River & Rest Area Ramp
4 Span/P.P.C.B.B.

This bridge was inspected and found to be in **good** condition. The deck is rated good. There is a new A.C. wearing surface. The vertical clearance is posted at 14′ 6″.

The superstructure and sub-structure are rated good.

The channel is rated good.

Gilbert Hunter

ROUTINE BRIDGE INSPECTION REPORT

Page No.___

Form BIR 3.0C
(Rev. 9-22-98)
DT-1537

Field Report No. 14 Date 6/17/99
Previous Report No. 15 Date 6-13-01
Plans: Yes

Bridge No. 80I00400036 (Eleven Digit No.)
Bridge Location No. 80 - I0040 - 17.13 L (Co. Route Log Mile)

_____ over CANEY FORK RIV & NFA A431
Road Name — Crossing

Indepth Insp. Req'd: No
(If yes itemize limits under comment

Structure Type PPCBB

FRACTURE CRITICAL: NO

FEATURE CHANGES:

Wearing Surface ___ Type ___ Depth ___ (in.)
Bridge Rail ___ Describe changes:
Approach Rail ___

CLEARANCE CHANGES: (If yes make changes below)

Vertical Clearance over deck ___ (ft.-in.)
Vertical Under Clearance ___ (ft.-in.)
Horizontal Under Clearance ___ (*.* ft.)
Deck Width Curb/Curb ___ (*.* ft.)
Deck Width Rail/Rail ___ (*.* ft.)
Sidewalk Width Rt. ___ Lt. ___

INSPECTORS

Hunter
Daniel
Waller
Thompson

Condition: **GOOD** (If change describe in comments)

		Comments
Approaches	G	
Deck Condition (Item 58)	G	
Superstructure (Item 59)		
a. Beams	G	
b. Bearings	G	
c. Diaphragms	G	
Substructure (Item 60)		
a. Caps/Bridge Seats	G	
b. Columns/Piles	G	
c. Footings	NV	
d. Wing W./Breast W.	G	
Scour/Erosion	G	
Channel (Item 61)	G	

UNDERWATER INSPECTION

To Be Performed By: None required
Date Underwater Insp. ___
BRIDGE is: open

Weight Limit Posted NO
Gross..... ___ Tons
2 Axle..... ___ Tons
3 or more Axles.. ___ Tons

COMMENTS:

Supervising Bridge Inspector: Gilbert Wayne Hunter

BRIDGE RATING: **GOOD**

SUMMARY
80-I40-17.13 LT
6-13-01

I40/Caney Fork River & Rest Area Ramp
4 Span/P.P.C.B.B.

This bridge was inspected and found to be in **good** condition. The deck is rated good. There is a new A.C. wearing surface.

The superstructure and sub-structure are rated good.

The channel is rated good.

Gilbert Hunter

BRIDGE INSPECTION REPORT

FORM BIR 3.0
Rev. 09/24/98
DT-0069

FIELD REPORT NO. 14 DATE 6/17/99
REVIOUS REPORT NO. 13 DATE 5-7-97
PLANS ---- YES [X] NO [ ]

BRIDGE NO. 80I0040003 6
ELEVEN DIGIT NO.

BRIDGE LOC. NO. 80 - I40 - 17.13 Lt.
CO. ROUTE LOG MILE

I40 W.B.L. OVER A431 & Coney Fork River
ROAD NAME — FEATURE INTERSECTED — STRUCTURE NAME (IF NAMED)

YEAR CONSTRUCTED 1960 (ESTIMATED OR ACTUAL) [ ] [X]
COUNTY Smith
MAINTENANCE DISTRICT NO. 32

YEAR WIDENED 1990 ESTIMATED OR ACTUAL [ ] [X]
YEAR REHABILITATED 1990 ESTIMATED OR ACTUAL [ ] [X]

FEATURES

WEARING SURFACE-- CONCRETE [ ] TIMBER [ ] ASPHALT [X] (DEPTH= 3¼)
FLARED WIDTH --------- YES [ ] NO [X]
NAVIGATIONAL CONTROL-- YES [ ] NO [X]
MEDIAN WIDTH -------- OPEN [ ] NONE [X] CLOSED [ ]

BRIDGE SKEW 90° LT [ ] RT [ ]

STRUCTURE TYPE PPC BB (Main Span) NO. SPANS 4 (Main Span)

STRUCTURE TYPE — (Approach Spans) NO. SPANS — (Approach Spans)

MAXIMUM SPAN LENGTH 90' TOTAL LENGTH 322'

INSPECTORS
1. Hunter
2. Daniel
3. Love
4. Crutcher
5.
6.
7.
8.
9.

WIDTHS
DECK OUT-TO-OUT 44
ROADWAY CURB/CURB 42
SIDEWALK — RT — LT
*APPROACH ROADWAY 24'
APPR. SHLD. 10' RT 4' LT
*DOES NOT INCLUDE SHOULDER

CLEARANCES
MIN. VERTICAL OVER DECK —
MIN. VERTICAL UNDER CL 15'-0"
MIN. LATERAL UNDER CL 4' RT
0 LT

(<25')
NBIS BRIDGE LENGTH > 25'
(ft) (in)

UNDERWATER INSPECTION
INSPECTION PERFORMED BY:
DOT FIELD TEAM [ ] DATE
CONTRACT DIVERS [ ] DATE
NONE REQUIRED [X]

FRACTURE CRITICAL DETAILS: YES [ ] NO [X]
IF YES, INCLUDE BIR 3.9

CHANGE IN STRUCTURAL CONDITION YES [ ] NO [X]
MAJOR REPAIRS MADE YES [ ] NO [X]

COMMENTS: —

Gilbert Wayne Hunter
SUPERVISING BRIDGE INSPECTOR

BRIDGE RATING [X] [ ] [ ] [ ]
GOOD FAIR POOR CRITICAL

FORM BIR 3.1
Rev. 09/24/98
DT-0080

BRIDGE LOC. NO. 80 - I40 - 17.13 Lt.
CO. ROUTE L.M.

DATE: 6-17-99

PERFORMANCE EVALUATION

Time of day inspected 1:00 Weather conditions Sunny 70°

Vehicles observed Tractor Trailer & passenger type

LIVE LOAD BEHAVIOR	YES	NO	COMMENTS
Substructure			
Horiz. & Vert. Defl. - - -	[ ]	[X]	
Vibration - - - - - - - - -	[ ]	[X]	
Superstructure			
Horiz. & Vert. Defl. - - -	[X]	[ ]	
Vibration - - - - - - - - -	[X]	[ ]	

APPROACH

Alignment	(G)	F	P	C	
Slab	G	F	P	C	NV
Joints	G	F	P	C	NV
Pavement	(G)	F	P	C	New AC overlay
Embankment	(G)	F	P	C	
Drains	G	F	P	C	NA

TRAFFIC SAFETY FEATURES

					STANDARD	SUB-STANDARD	
Bridgerailing	(G)	F	P	C	[X]	[ ]	
Transitions	(G)	F	P	C	[X]	[ ]	
Guardrail	(G)	F	P	C	[X]	[ ]	
Guardrail Terminal	(G)	F	P	C	[X]	[ ]	

SIGNING

	YES	NO	NEEDED
Paddleboard - - - - - - - - - - - - -	[ ]	[X]	[ ]
Vertical Clearance (< 14') - - - -	[ ]	[ ]	[ ]
Narrow [ ] One Lane Bridge [ ] -	[ ]	[X]	[ ]

WEIGHT LIMIT POSTED
YES [ ] NO [X]

GROSS _____ TONS
2 AXLE _____ TONS
3 OR MORE AXLES _____ TONS

Other Signs or Plaques _____

Comments Regarding Any Problems With Signing _____

Other Recommendations _____

FORM BIR 3.2
Rev. 09/24/98
DT-0081

BRIDGE LOC. NO. 80 - I40 - 17.13 Lt. DATE: 6-17-99
CO. ROUTE L.M.

DECK					COMMENTS
WEARING SURFACE	(G)	F	P	C	
DECK - STRUCTURAL CONDITION	G	F	P	C	NV
CURBS	G	F	P	C	NA
MEDIAN	G	F	P	C	NA
SIDEWALKS	G	F	P	C	NA
PARAPET	(G)	F	P	C	
RAILING	G	F	P	C	NA
PAINT	G	F	P	C	NA
DRAINS	G	F	P	C	NA
LIGHTING STD'S	G	F	P	C	NA
UTILITIES	G	F	P	C	NA
JOINT LEAKAGE	(G)	F	P	C	
EXPANSION JOINTS	G	F	P	C	NV

SUPERSTRUCTURE					COMMENTS
BEARING DEVICES	(G)	F	P	C	
GIRDERS OR BEAMS	(G)	F	P	C	
FLOOR BEAMS	G	F	P	C	NA
STRINGERS	G	F	P	C	NA
DIAPHRAGMS	G	F	P	C	NA
BRACING	G	F	P	C	NA
TRUSSES - GENERAL	G	F	P	C	
- PORTALS	G	F	P	C	
- BRACING	G	F	P	C	
PAINT	G	F	P	C	NA
ALIGNMENT OF MEMBERS	(G)	F	P	C	

TEXTURE COAT					
CONDITION RATING	(G)	F	P	C	
OVERALL APPEARANCE	(G)	F	P	C	NEEDS SPOT PAINTING? YES [ ] NO [X]
STAINING	(G)	F	P	C	NEEDS REPAINTING? YES [ ] NO [X]
SCALING	(G)	F	P	C	
FADING	(G)	F	P	C	

COMMENTS:

RECOMMENDATIONS

FORM BIR 3.3
Rev. 09/24/98
DT-0082

BRIDGE LOC. NO. 80 - I40 - 17.13 Lt.
CO. ROUTE L.M.

DATE: 6-17-99

SUBSTRUCTURE

ABUTMENTS					COMMENTS
CAPS	(G)	F	P	C	
BREASTWALL	G	F	P	C	NA
WINGS	(G)	F	P	C	
BACKWALL	G	F	P	C	NV
PLUMB	(G)	F	P	C	
FOOTING	G	F	P	C	NV
PILES	G	F	P	C	NV
EMBANKMENT	(G)	F	P	C	
BEARING SURFACE	(G)	F	P	C	
BEARINGS	(G)	F	P	C	
SLOPE PAVING	(G)	F	P	C	

PIERS					
CAPS	(G)	F	P	C	
COLUMNS	(G)	F	P	C	
PLUMB	(G)	F	P	C	
FOOTINGS	G	F	P	C	NV
PILES	G	F	P	C	NV
BEARING SURFACE	(G)	F	P	C	
BEARINGS	(G)	F	P	C	

BENTS					
CAPS	(G)	F	P	C	
COLUMNS	(G)	F	P	C	
PLUMB	(G)	F	P	C	
FOOTINGS	G	F	P	C	NV
PILES	G	F	P	C	NV
BEARING SURFACE	(G)	F	P	C	
BEARINGS	(G)	F	P	C	

SCOUR CONDITION NONE [X]

RECOMMENDATIONS:

FORM BIR 3.8
Rev. 3-1-97
DT-1508

BRIDGE LOC. NO. 80 - I40 - 17.13 24 (_____)
CO. ROUTE L.M. (LOG km)

DATE: 6-17-99

STREAM CHANNEL DATA AND CONDITIONS

STREAM CROSSING: Carey Fork River

I. 1. Type of bed material? Bedrock & Gravel
2. Has the channel shifted? YES ☐ NO ☒ NOT APPARENT [
3. Condition of rip-rap? G F P C Est. $ failed ____ N/A ☒
4. Overall condition of channel? G [✓ F] P C
5. Item 61 - Code values 0 thru 9 according to the recording and coding guide currently in effect: 7
6. Underwater diver inspection recommended? YES ☐ NO ☒
If yes, why? ________

II. Channel and bank stability conditions: (check if applicable)
1. Steep bank - Failures upstream ☐ downstream ☐ conditions
2. Moderate bank erosion ☒
3. Bank Vegetation (a) low growth ☐ (b) large timber ☒ (c) dead trees ☒ (d) clear banks ☐
4. Sediment or gravel accumulation: YES ☒ NO ☐ UNKNOWN [
5. Channel altered or straightened: YES ☐ NO ☒ UNKNOWN [
6. Stable conditions: (a) live growth ☒ (b) bedrock ☒ (c) boulders ☒ (d) flat slopes [(<=2:1)

III. Waterway adequacy and debris characteristics: (check if applicable)
1. Bridge deck elevations:
(a) level with approach roadway . . . . ☒
(b) higher than approach roadway. . . . . ☐
(c) roadway approach >=0.6 m above natural ground line. . ☒
2. Abutment encroaches into channel . . . . ☐
3. Large scour (blowhole) under bridge. . . . . ☐
4. Indications that flood waters overtop bridge:
NO ☒ YES ☐ OCCASIONALLY ☐ FREQUENTLY ☐ UNKNOWN [
5. Debris characteristics:
(a) debris present YES ☒ NO ☐
(b) debris likely to accumulate: YES ☒ NO ☐
(c) dead trees upstream: ☒ or downstream: ☒

IV. Comments: heavy drift

* *

SPECIAL INSPECTION DATA - FOR REASONS OTHER THAN FC OR SCOUR

I. Does this bridge need a special inspection? YES ☐ NO ☒
II. Reason for special inspection: ________

NOTE: UNLESS OTHERWISE NOTED, MEASUREMENTS ARE TO BE TAKEN TO TWO (2) DECIMAL PLACES IN METERS.

SUMMARY
80-I40-17.13 LT
6-17-99

I40/Caney Fork River & Rest Area Ramp
4 Span/P.P.C.B.B.

This bridge was inspected and found to be in good condition. The deck is rated good. There is a new A.C. wearing surface.

The superstructure and sub-structure are rated good.

The channel is rated good.

Gilbert Hunter

CURRENT FIELD REPORT NO. 14 DATE 6-17-99
PREVIOUS FIELD REPORT NO. 13 DATE 5-7-97

FORM BIR 3.0A
Rev. 6-9-92
DT-1443

INSPECTION REPORT FOR UNDERPASS ROUTE

BRIDGE NO. 80I00400036 (ELEVEN DIGIT NUMBER)

UNDERPASS LOC. NO. 80 - A431 - 0.04 (CO. - RTE. - L.M.)

80 - I40 - 17.13 Lt. (CO. - RTE. - L.M.) OVER 80 - A431 - 0.04 (CO. - RTE. - L.M.)

STRUCTURE NAME (IF NAMED)

COUNTY Smith

YEAR CONSTRUCTED 1960 ESTIMATED [ ] ACTUAL [X]

YEAR WIDENED 1990

YEAR REHABILITATED 1990

GEOMETRIC FEATURES UNDER BRIDGE

DIVIDED HIGHWAY - - - - LEFT RDWY [X] RIGHT RDWY [ ] N.A. [ ]
TYPE OF WEARING SURFACE - - - - CONCRETE [ ] ASPHALT [ ] GRAVEL [ ]
WIDTH OF APPROACH TRAVELED ROADWAY 13' FT. (DOES NOT INCLUDE SHOULDERS)
WIDTH OF MEDIAN IF DIVIDED HIGHWAY 7 FT.
APPROACH SHOULDER WIDTH 6.3 FT. (RT.) 1 FT. (LT.)
*HORIZONTAL CLEARANCE UNDER BRIDGE 44.3 FT. ____ IN.
*DISTANCE BETWEEN PIER PROTECTION GUARDRAIL AND SUBSTRUCTURE — FT. (RT.) — FT. (LT.)
*WIDTH OF SIDEWALK UNDER BRIDGE 3 FT. (RT.) — FT. (LT.)
*MINIMUM VERTICAL CLEARANCE 15 FT. 0 IN.

*SHOW ON SKETCH

TRAFFIC SAFETY FEATURES FOR UNDERPASS ROUTE

		STANDARD	SUB-STANDARD	
PIER PROTECTION RAILING OR PARAPET	G F P C	[ ]	[ ]	NON EXIST [X]
APPROACH GUARDRAIL TRANSITIONS	G F (P) C	[ ]	[X]	NON EXIST [ ]
APPROACH GUARDRAIL	G (F) P C	[X]	[ ]	NON EXIST [ ]
APPROACH GUARDRAIL TERMINAL	(G) F P C	[X]	[ ]	NON EXIST [ ]

SIGNING FOR UNDERPASS ROUTE

PADDLEBOARD	YES [ ]	NO [X]	NEEDED [ ]
VERTICAL CLEARANCE (< 14'6")	YES [X]	NO [ ]	NEEDED [ ]
NARROW PASSAGE	YES [ ]	NO [X]	NEEDED [ ]
ONE LANE PASSAGE	YES [ ]	NO [X]	NEEDED [ ]
CURVE	YES [X]	NO [ ]	NEEDED [ ]
SPEED LIMIT	YES [X]	NO [ ]	NEEDED [ ]

INSPECTORS

1. Hunter
2. Daniel
3. Love
4. Crutcher
5.
6.

FORM BIR 3.0A (CONTINUED)
Rev. 6-9-92
DT-1443

UNDERPASS LOC. NO. 80 - A431 - 8.04
CO. RTE. L.M.

OTHER SIGNS OR PLAQUES —

COMMENTS REGARDING ANY PROBLEM WITH SIGNING —

BRIDGE FEATURES

BRIDGE SKEW 90°
STRUCTURE TYPE PPCBB (MAIN SPAN) NO. SPANS 4 (MAIN TYPE)
STRUCTURE TYPE — (APPROACH SPAN) NO. SPANS — (APPROACH TYPE)
MAXIMUM SPAN LENGTH 90' FT. TOTAL LENGTH 320' FT.
WIDTH OF BRIDGE OUT-TO-OUT 44 FT. (RT. < TO L OF BRIDGE)
WIDTH OF BRIDGE ALONG SKEW ____ FT. (IF UNABLE TO MEASURE AT RT. ∢ TO L OF BRIDGE)
NUMBER OF LANES/TRACKS ON BRIDGE 2

BRIDGE CONDITION (G) F P C

DOES POTENTIAL EXIST FOR ELEMENTS FROM BRIDGE FALLING ON ROADWAY BENEATH? YES [ ] NO [X]

DOES POTENTIAL EXIST BECAUSE OF DETERIORATED CONDITION FOR FAILURE OF MAJOR MEMBERS? YES [ ] NO [X]

COMMENT ON ANY CONDITIONS OF BRIDGE THAT WOULD EFFECT ROADWAY BENEATH —

NOTE: IF UNDERPASS ROUTE IS DIVIDED HIGHWAY, USE TWO (2) OF THESE FORMS, ONE FOR EACH ROADWAY.

MINIMUM PICTURES REQUIRED

1. ELEVATION VIEW OF BRIDGE ON BOTH SIDES SHOWING UNDERPASS
2. VIEW SHOWING BOTH APPROACHES TO BRIDGE
3. VIEW SHOWING SAFETY FEATURES
4. VIEW SHOWING ANY PROBLEMS

CURRENT FIELD REPORT NO. 14 DATE 6-17-99
PREVIOUS FIELD REPORT NO. 13 DATE 5-7-97

FORM BIR 3.0A
Rev. 6-9-92
DT-1443

INSPECTION REPORT FOR UNDERPASS ROUTE

BRIDGE NO. 80I00400036 (ELEVEN DIGIT NUMBER) UNDERPASS LOC. NO. 80 - A431 - 0.04 (CO. RTE. L.M.)

80 - I40 - 17.13 Lt. OVER 80 - A431 - 0.04
CO. RTE. L.M. CO. RTE. L.M. STRUCTURE NAME (IF NAMED)

COUNTY Smith

YEAR CONSTRUCTED 1960 YEAR WIDENED 1990 YEAR REHABILITATED 1990
ESTIMATED [ ] ACTUAL [X]

GEOMETRIC FEATURES UNDER BRIDGE

DIVIDED HIGHWAY - - - - LEFT RDWY [ ] RIGHT RDWY [X] N.A. [ ]
TYPE OF WEARING SURFACE - - - - CONCRETE [ ] ASPHALT [X] GRAVEL [ ]
WIDTH OF APPROACH TRAVELED ROADWAY 13' FT. (DOES NOT INCLUDE SHOULDERS)
WIDTH OF MEDIAN IF DIVIDED HIGHWAY 7 FT.
APPROACH SHOULDER WIDTH 5' FT. (RT.) 2' FT. (LT.)
*HORIZONTAL CLEARANCE UNDER BRIDGE 44.3 FT. ____ IN.
*DISTANCE BETWEEN PIER PROTECTION GUARDRAIL AND SUBSTRUCTURE 11' FT. (RT.) —— FT. (LT.)
*WIDTH OF SIDEWALK UNDER BRIDGE 3.5 FT. (RT.) 3.5 FT. (LT.)
*MINIMUM VERTICAL CLEARANCE 15' FT. 1" IN.

*SHOW ON SKETCH

TRAFFIC SAFETY FEATURES FOR UNDERPASS ROUTE

		STANDARD	SUB-STANDARD	
PIER PROTECTION RAILING OR PARAPET	(G) F P C	[X]	[ ]	NON EXIST [ ]
APPROACH GUARDRAIL TRANSITIONS	(G) F P C	[X]	[ ]	NON EXIST [ ]
APPROACH GUARDRAIL	(G) F P C	[X]	[ ]	NON EXIST [ ]
APPROACH GUARDRAIL TERMINAL	(G) F P C	[X]	[ ]	NON EXIST [ ]

SIGNING FOR UNDERPASS ROUTE

PADDLEBOARD	YES [ ]	NO [X]	NEEDED [ ]
VERTICAL CLEARANCE (< 14'6")	YES [X]	NO [ ]	NEEDED [ ]
NARROW PASSAGE	YES [ ]	NO [X]	NEEDED [ ]
ONE LANE PASSAGE	YES [ ]	NO [X]	NEEDED [ ]
CURVE	YES [X]	NO [ ]	NEEDED [ ]
SPEED LIMIT	YES [X]	NO [ ]	NEEDED [ ]

INSPECTORS
1. Hunter
2. Daniel
3. Love
4. Crutcher
5.
6.

FORM BIR 3.0A (CONTINUED)
Rev. 6-9-92
DT-1443

UNDERPASS LOC. NO. 80 - A431 - 0.04
CO. RTE. L.M.

OTHER SIGNS OR PLAQUES —

COMMENTS REGARDING ANY PROBLEM WITH SIGNING —

BRIDGE FEATURES

BRIDGE SKEW 90°
STRUCTURE TYPE PPC BB (MAIN SPAN) NO. SPANS 4 (MAIN TYPE)
STRUCTURE TYPE — (APPROACH SPAN) NO. SPANS — (APPROACH TYPE)
MAXIMUM SPAN LENGTH 90' FT. TOTAL LENGTH 320' FT.
WIDTH OF BRIDGE OUT-TO-OUT 44 FT. (RT. < TO L OF BRIDGE)
WIDTH OF BRIDGE ALONG SKEW ____ FT. (IF UNABLE TO MEASURE AT RT. ∢ TO L OF BRIDGE)
NUMBER OF LANES/TRACKS ON BRIDGE 2

BRIDGE CONDITION (G) F P C

DOES POTENTIAL EXIST FOR ELEMENTS FROM BRIDGE FALLING ON ROADWAY BENEATH? YES [ ] NO [X]

DOES POTENTIAL EXIST BECAUSE OF DETERIORATED CONDITION FOR FAILURE OF MAJOR MEMBERS? YES [ ] NO [X]

COMMENT ON ANY CONDITIONS OF BRIDGE THAT WOULD EFFECT ROADWAY BENEATH —

NOTE: IF UNDERPASS ROUTE IS DIVIDED HIGHWAY, USE TWO (2) OF THESE FORMS, ONE FOR EACH ROADWAY.

MINIMUM PICTURES REQUIRED

1. ELEVATION VIEW OF BRIDGE ON BOTH SIDES SHOWING UNDERPASS
2. VIEW SHOWING BOTH APPROACHES TO BRIDGE
3. VIEW SHOWING SAFETY FEATURES
4. VIEW SHOWING ANY PROBLEMS

80-I40-17.13 Lt. 6/17/99

ASSUMED ELEV.-- 100 Ft.-- TOP OF PARAPET

STATION	ELEV. 1999
A1 0+00	79.2
P1 0+71	68
P2 1+61	43.5
P3 2+51	43.2
A2 3+22	92.7

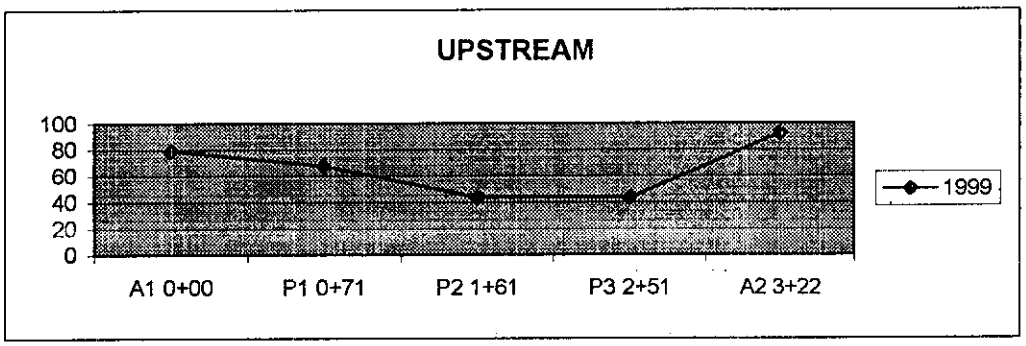

STATION	ELEV. 1999
A1 0+00	78.7
P1 0+71	67.2
P2 1+61	37.5
P3 2+51	41.7
A2 3+22	90.4

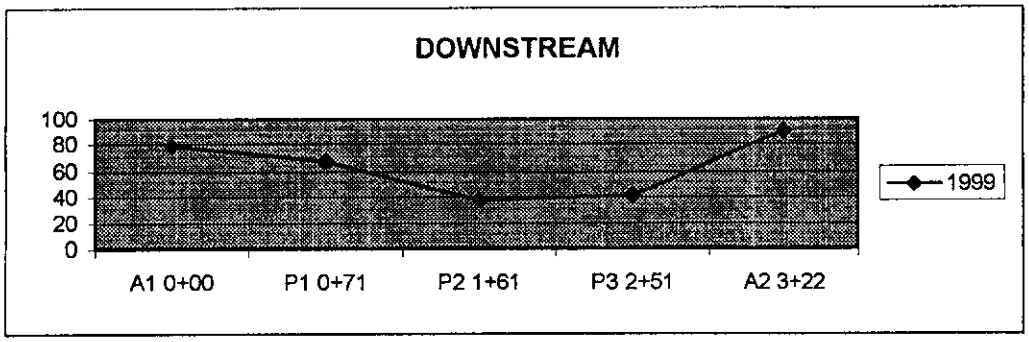

HORIZONTAL & VERTICAL CLEARANCES

PAGE NO. ____

80	I-40	17.13 Lt.	DATE 6-17-99 MD
COUNTY	ROUTE	LOG MILE	

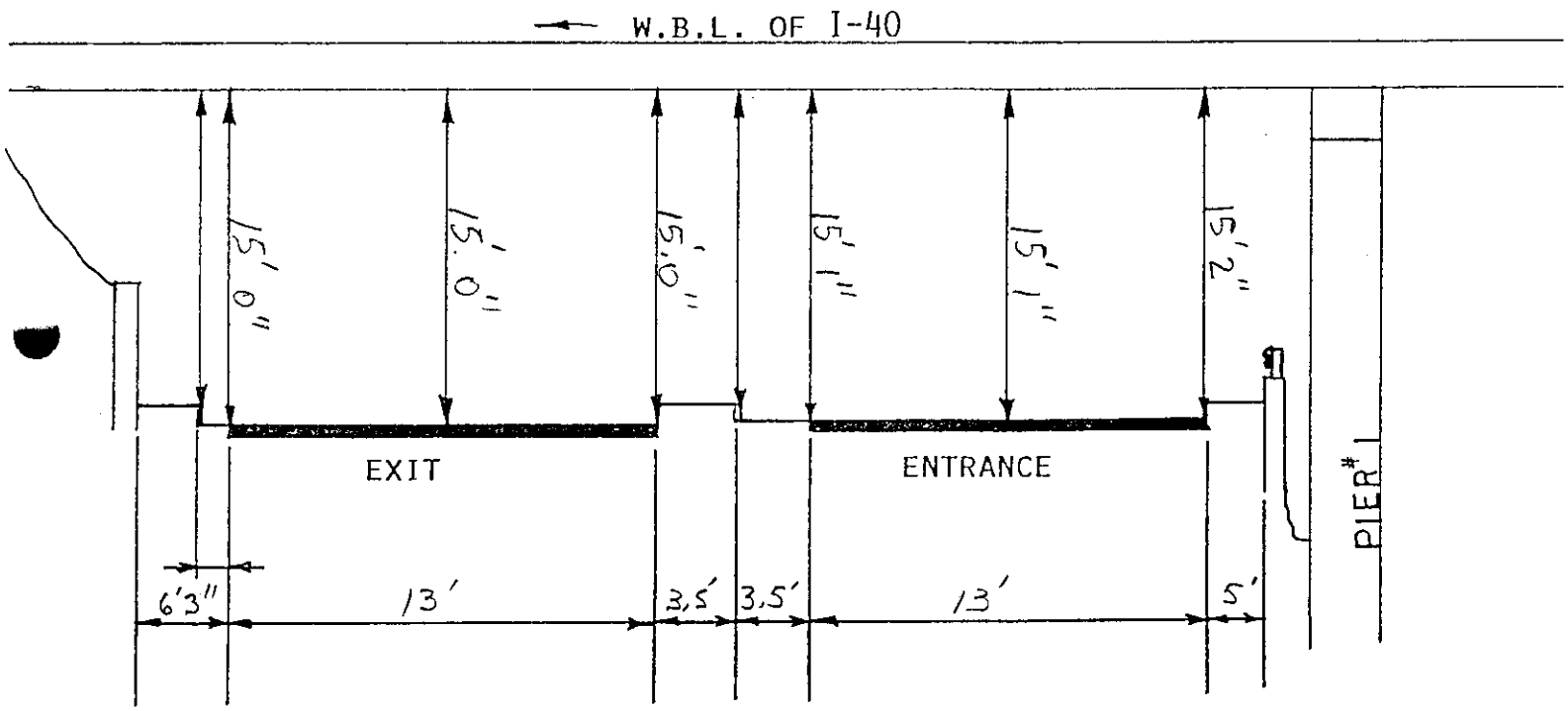

LOOKING NORTH ON REST AREA RAMP(80-A431-0.04)

HORIZONTAL & VERTICAL CLEARANCES

PAGE NO. 14

80	I-40	17.13
COUNTY	ROUTE	LOG MILE

DATE 3/8/93

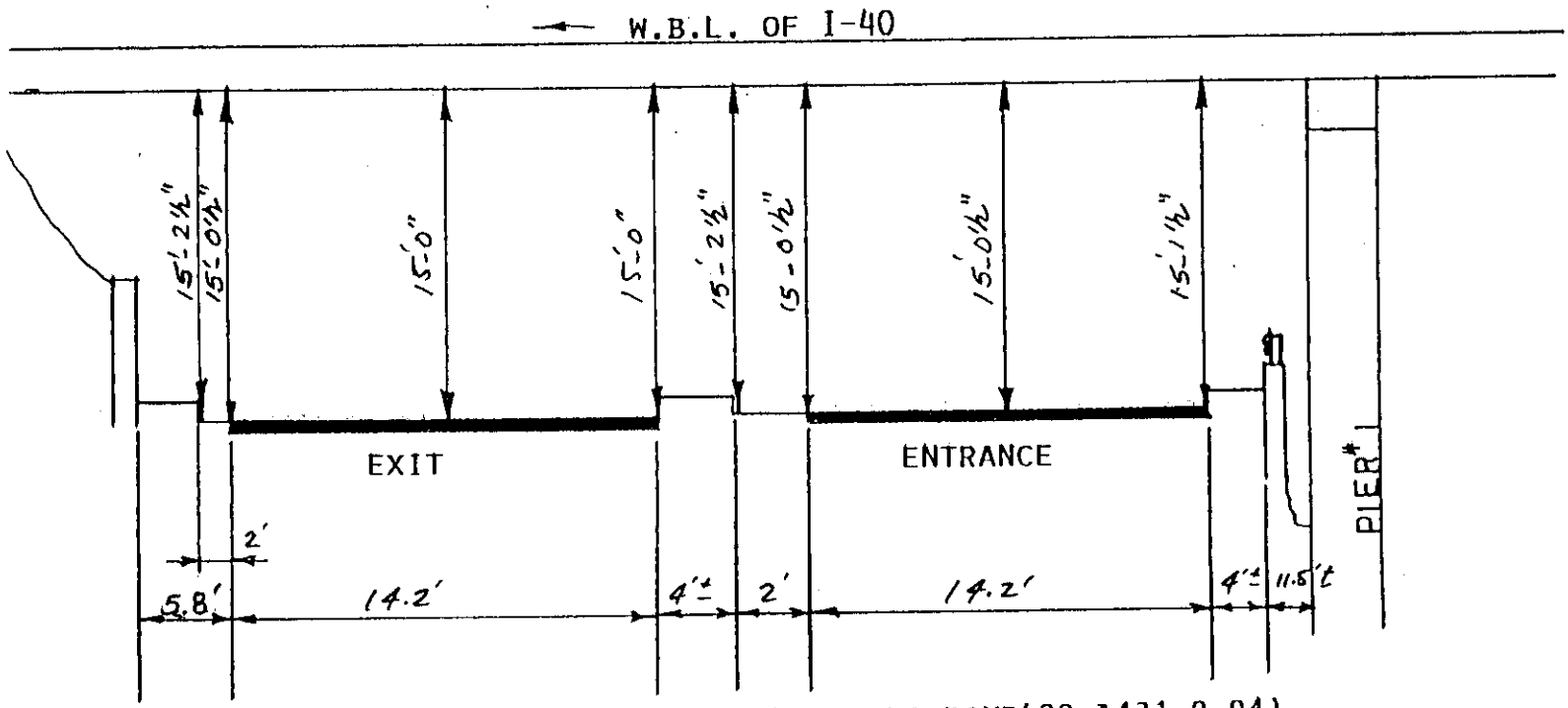

LOOKING NORTH ON REST AREA RAMP(80-A431-0.04)

ELEVATIONS OF DECK

DT0905

80	I40	17.13 L (WBL)	3/26/91
COUNTY	ROUTE	LOG MILE	DATE

STATION	TOP OF PARAPET	GUTTER	CENTER LINE	GUTTER	TOP OF PARAPET
Abt. 1	520.73	518.03	518.30	518.70	521.39
Pier 1	521.37	518.70	519.03	519.38	522.10
Pier 2	522.22	519.60	519.98	520.27	523.01
Pier 3	523.24	520.50	520.98	521.14	523.90
Abt. 2	523.99	521.25	521.50	521.88	524.58

BENCH MARK: Top of N.E. Bolt in base of outside leg of Sign - 30' Rt. of ℄ of (EBL) Rt. La. - Sta. 522+00

LOCATION

517.79

ELEVATION

HORIZONTAL & VERTICAL CLEARANCES

PAGE NO. 24

80 COUNTY | I-40 ROUTE | 17.13 LOG MILE

DATE 2/22/91

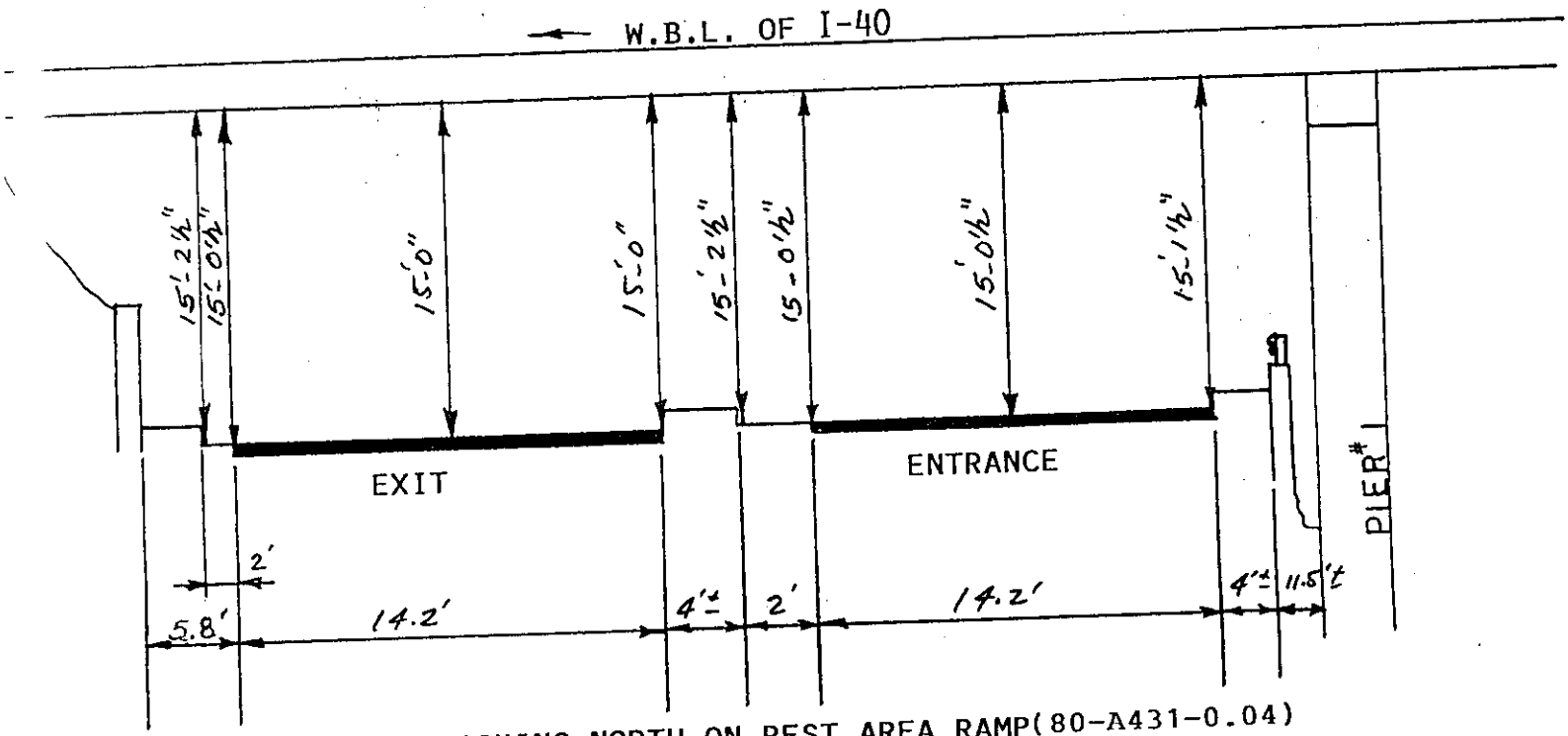

LOOKING NORTH ON REST AREA RAMP(80-A431-0.04)

ELEVATIONS OF DECK

DT0905

80	I40	17.13L (WBL)	4/3/89
COUNTY	ROUTE	LOG MILE	DATE

STATION	TOP OF CURB	GUTTER	CENTER LINE	GUTTER	TOP OF CURB
Abt. 1	518.40	517.91	518.25	518.27	518.87
Pier 1	519.12	518.57	518.91	518.94	519.56
Pier 2	520.03	519.57	519.87	519.88	520.57
Pier 3	520.93	520.54	520.82	520.79	521.38
Abt. 1	521.62	521.19	521.43	521.53	522.07

BENCH MARK Top of N.E. Bolt in base of inside leg of Sign - 30' Rt. of ℄ of (EBL) Rt. La - Sta. 522+00

LOCATION

519.81

ELEVATION

BRIDGE NO. 80 (COUNTY) I-40 (ROUTE) 17.13 L (LOG MILE)

PAGE NO. 22

4/3/89
DATE

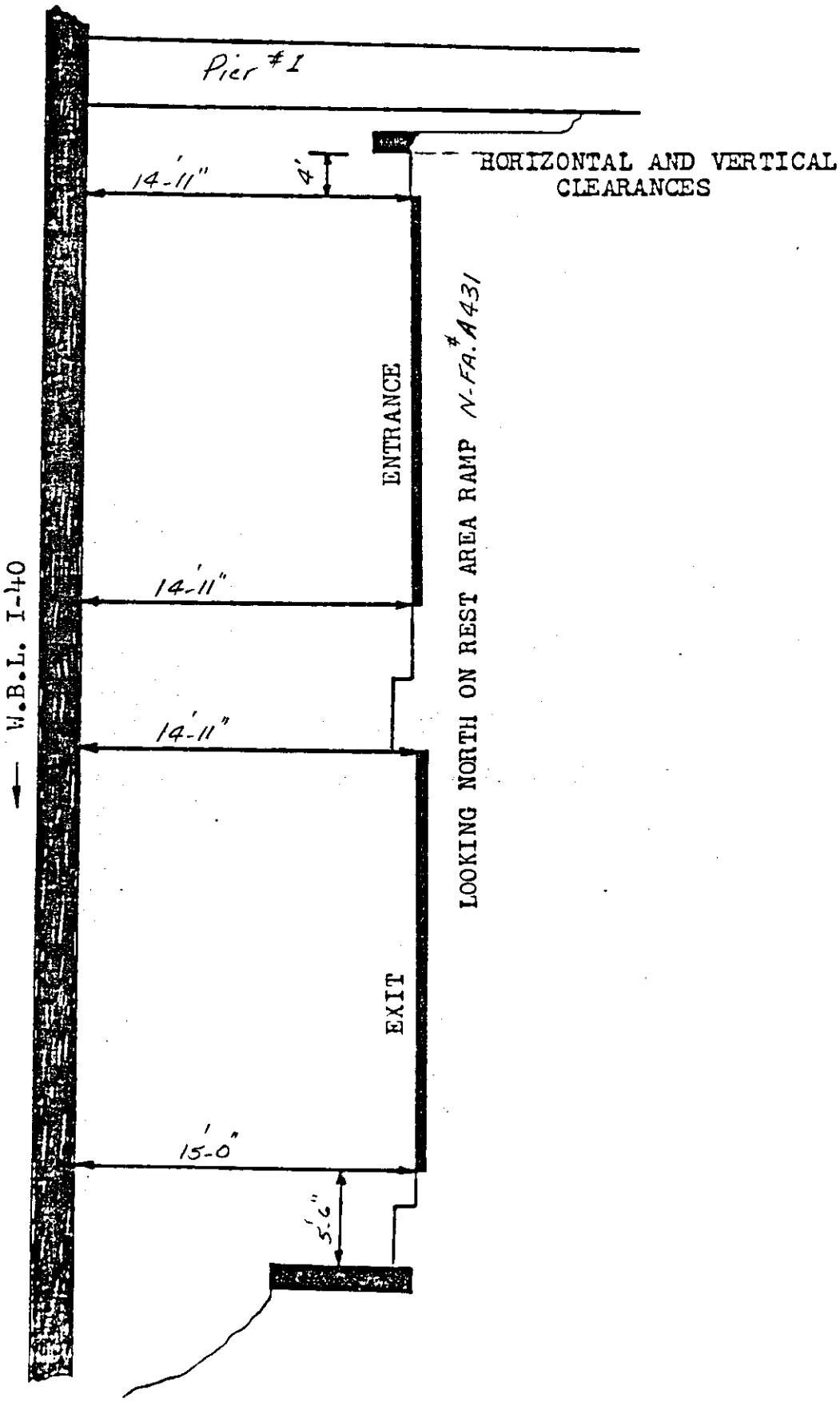

No Significant Change

BRIDGE NO. 80 I-40 ~~17.25~~ 17.13L Left Lane

Page No. 21

Date: 8/12/81

ELEVATIONS OF DECK

STATION	TOP OF CURB	GUTTERLINE	CENTERLINE	GUTTERLINE	TOP OF CURB
518+50	518.36	517.71	518.12	518.22	518.82
519+20	519.12	518.55	518.82	518.94	519.56
520+10	520.03	519.61	519.79	519.85	520.52
521+00	520.94	520.52	520.74	520.80	521.41
521+70	521.65	521.11	521.39	521.56	522.11

BENCH MARK: Top of N.E. Bolt in Base of Inside Leg of Sign - 30' Rt. of ℄ of Rt. Lane - Sta. 522+00

(LOCATION)

BENCH MARK: 519.81

(ELEVATION)

BRIDGE NO. 80 / COUNTY — I-40 / ROUTE — 17.13 L / LOG MILE

PAGE NO. 22

4/1/87
DATE

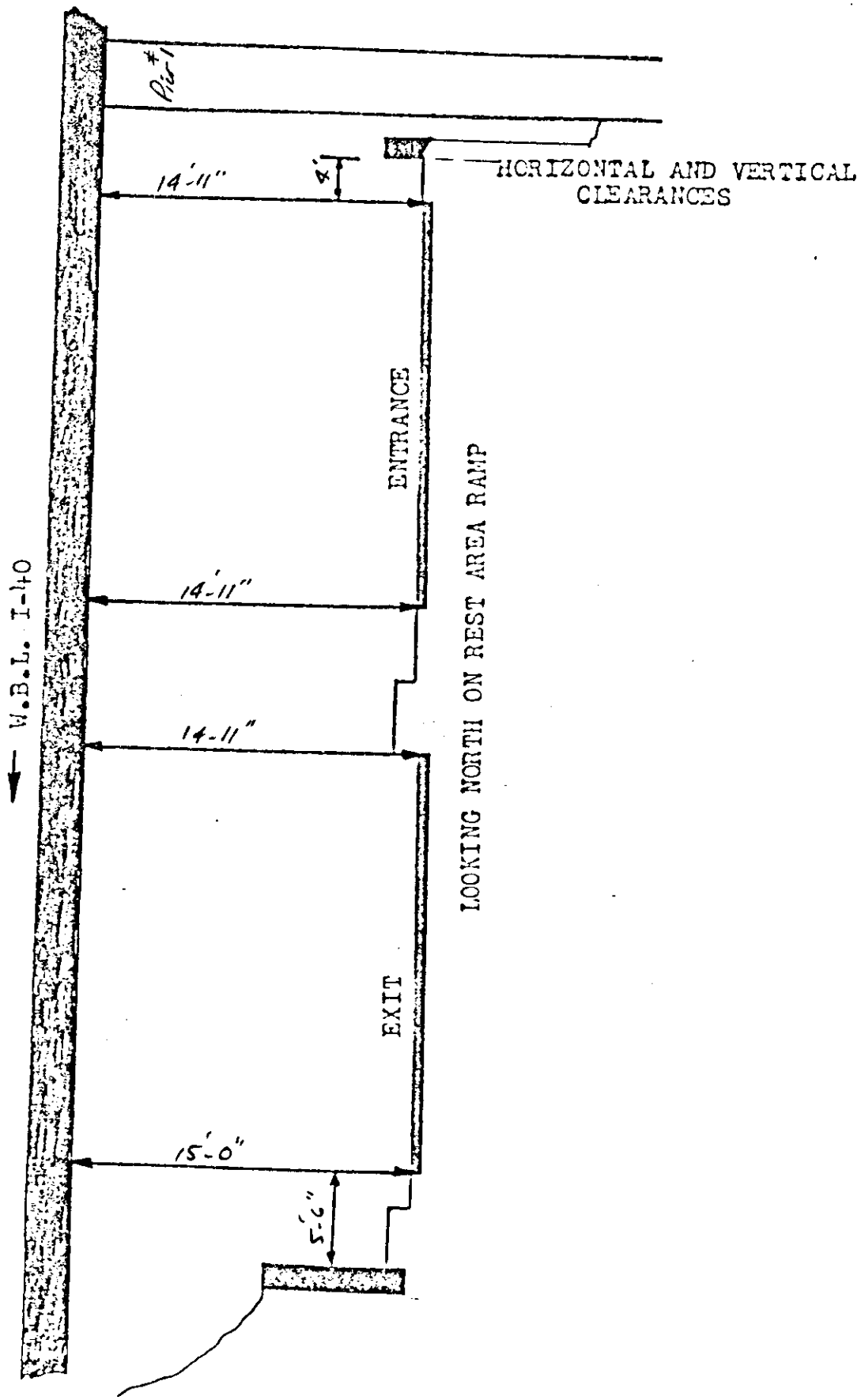

No Significant Change

BRIDGE NO. 80 (CO.) I-40 (ROUTE) ~~17.25~~ 17.13L (LOG MILE) Left Lane

Page No. 14

Date: 8/12/81

ELEVATIONS OF DECK

STATION	TOP OF CURB	GUTTERLINE	CENTERLINE	GUTTERLINE	TOP OF CURB
518+50	518.36	517.71	518.12	518.22	518.82
519+20	519.12	518.55	518.82	518.94	519.56
520+10	520.03	519.61	519.79	519.85	520.52
521+00	520.94	520.52	520.74	520.80	521.41
521+70	521.65	521.11	521.39	521.56	522.11

BENCH MARK Top of N.E. Bolt in Base of Inside Leg of Sign - 30' Rt. of ℄ of Rt. Lane - Sta. 522+00

(LOCATION)

BENCH MARK 519.81

(ELEVATION)

BRIDGE NO. 80 (COUNTY) I-40 (ROUTE) 17.13L (LOG MILE)

5/3/85
DATE

HORIZONTAL AND VERTICAL CLEARANCES

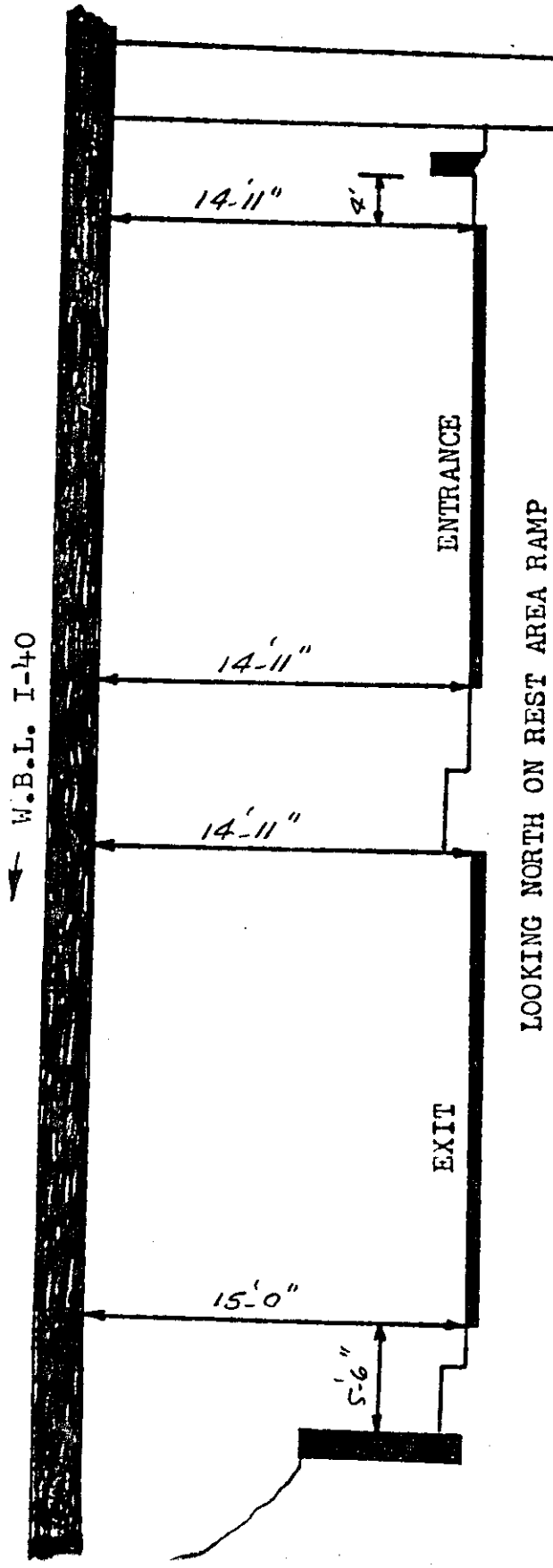

6-14-77
R

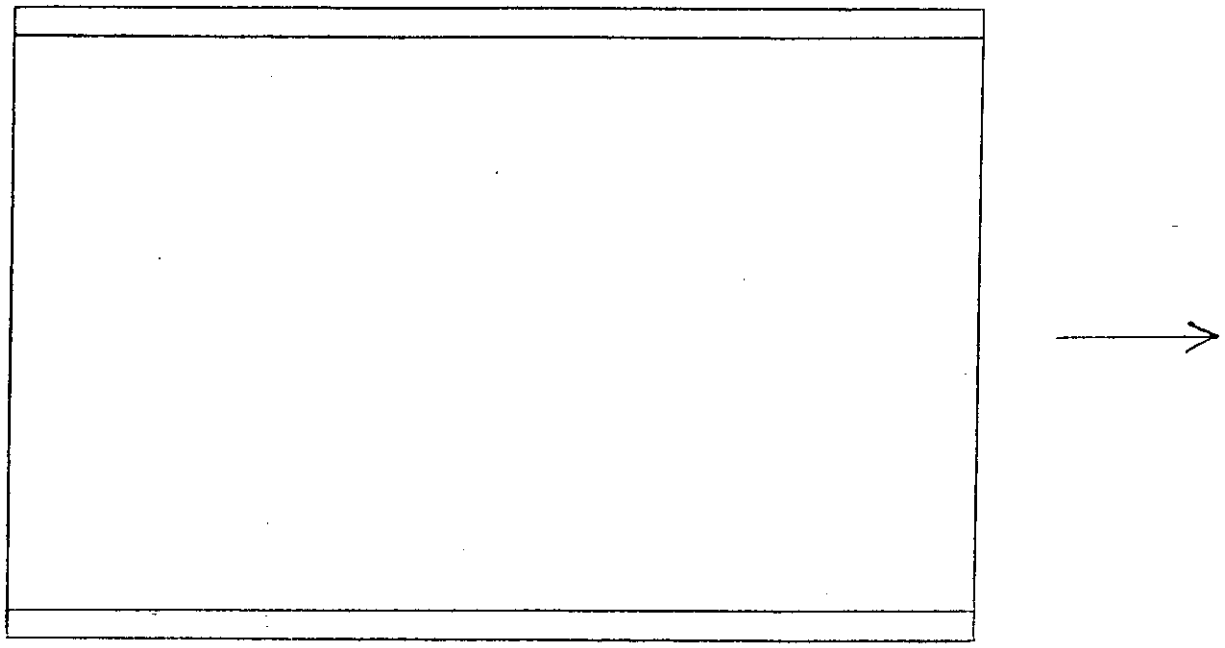

TOP Slab # 1 Br. # 80-I-10-1713 LT.

DECK	NU	AC OVERLAY
PARAPET	G	
DRAINS	NA	
JOINTS	NU	PAVED OVER

6-14-71
2

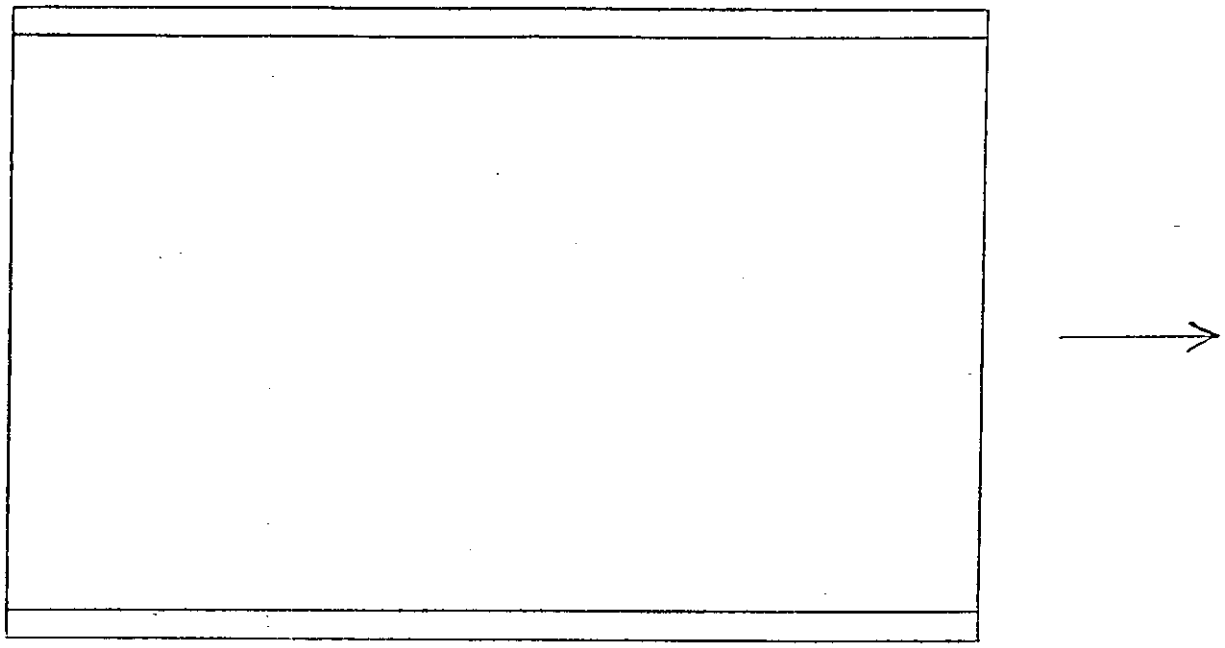

TOP SLAB #2 Br. #80-I-40-17.13 LT.

DECK	NV	AC OVERLAY
FORMAT	G	
DRAINS	NA	
JOINTS	NV	PAVED OVER

6-11-94
R

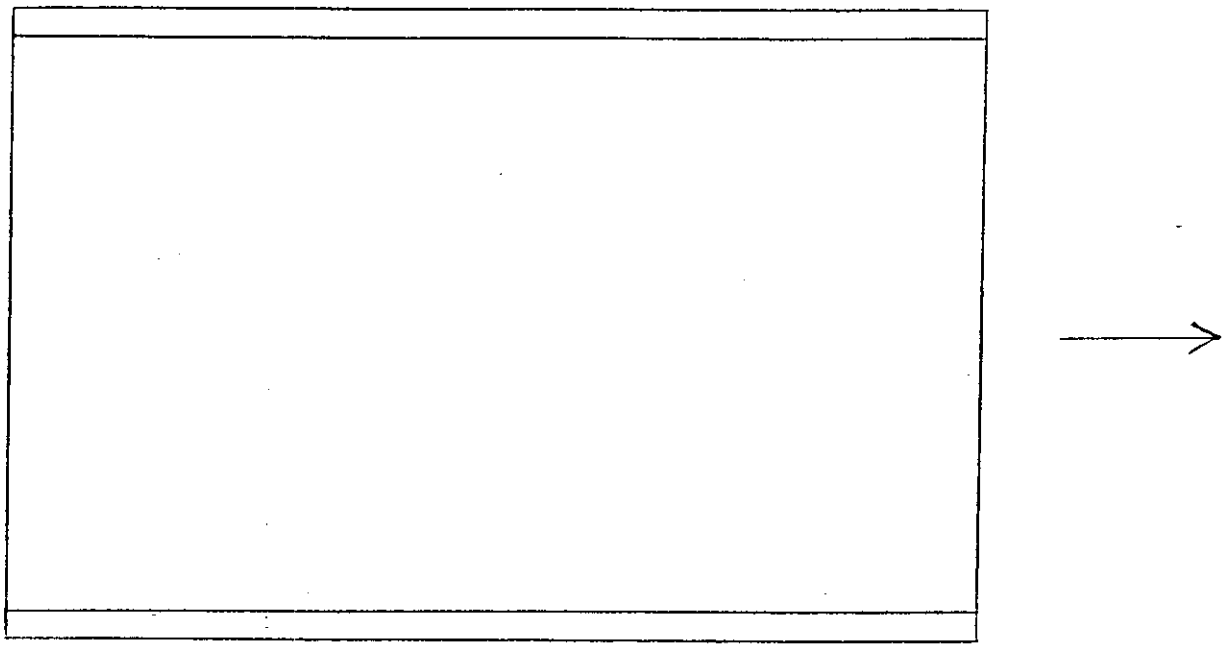

TOP SLAB # 3 Br. # 80-I-40-17.13 LT.

DECK	NV	AC OVERLAY
PARAPET	G	
DRAINS	NA	
JOINTS	NV	PAVED OVER

6-17-99
R.

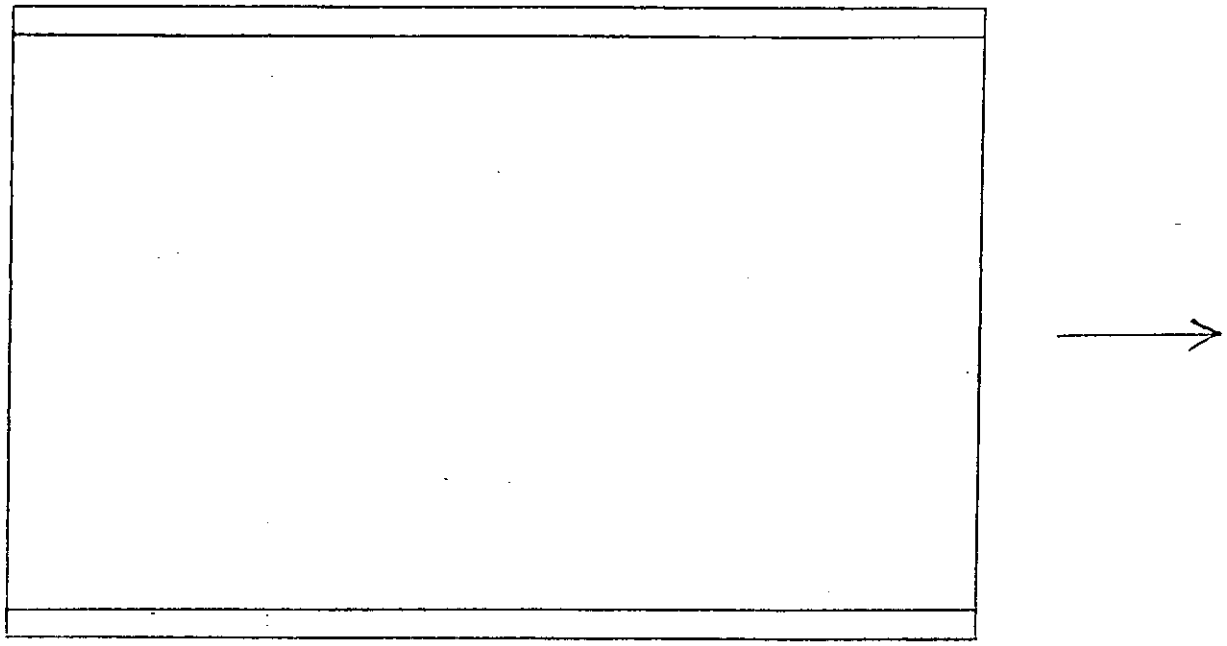

TOP SLAB # 4 Br. # 80-I-40-1713 LT.

DECK	NV	AC OVERLAY
PARAPET	G	
DRAINS	N/A	
JOINTS	NV	PAVED OVER

6-11-97 DZ

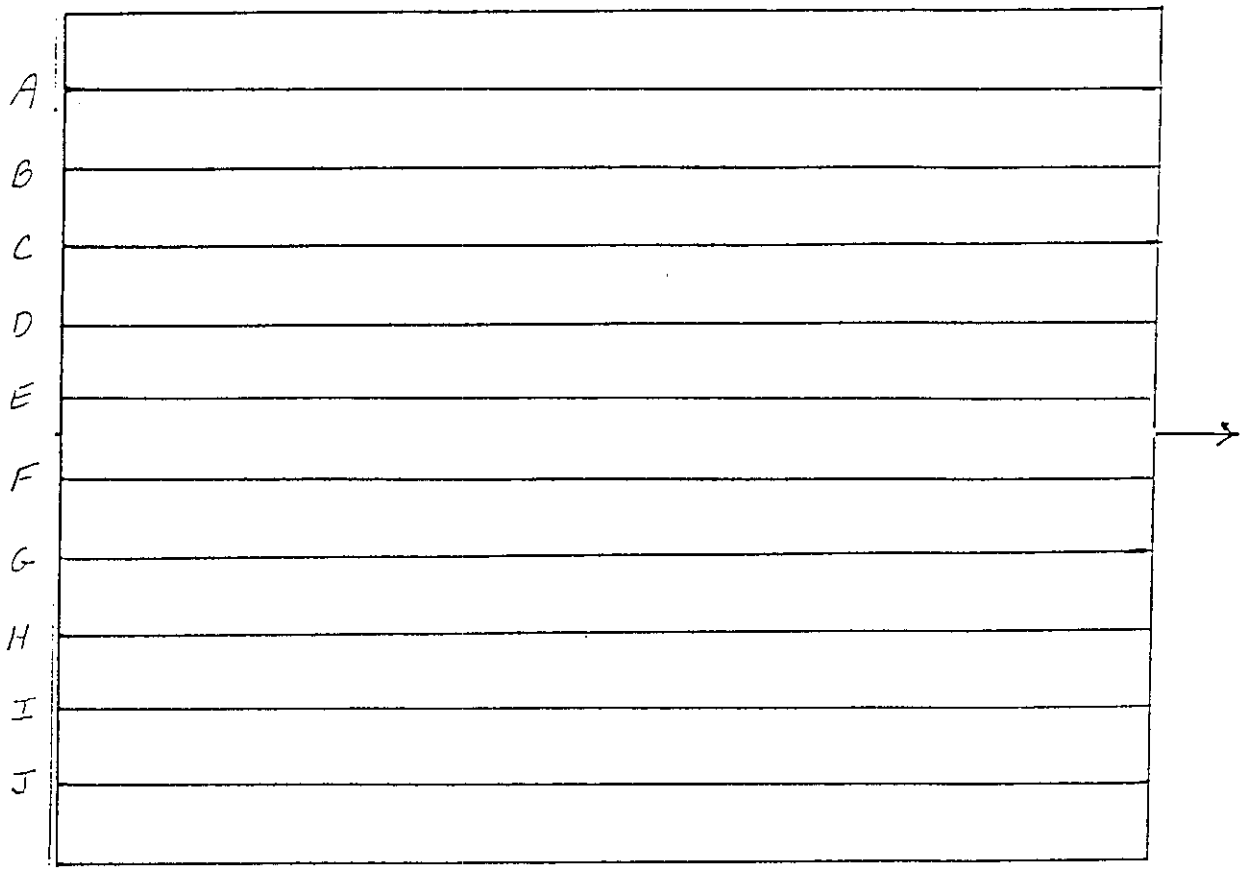

Bottom Slab = 1 Br. = 80 - I40 - 17.18 LT

Deck	U.I	
	N/V	
Diaph.	N/A	
Beams	✓	

6-17-99 BP

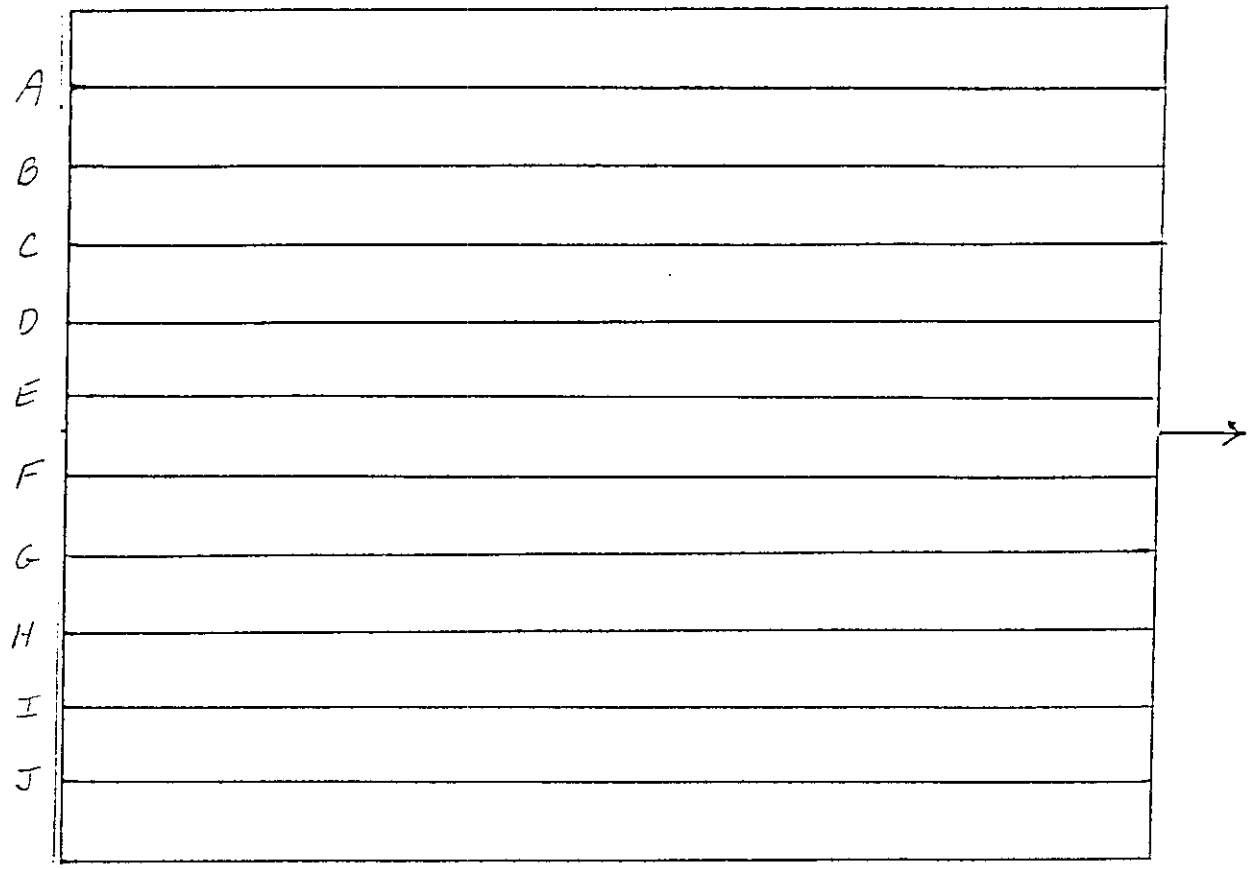

BOTTOM SLAB = 2 Br. #80-I40-17.13 LT

Deck	N/V	
	U/I	
Diaph.	N/A	
Beams	U	

6-17-99 B.X.

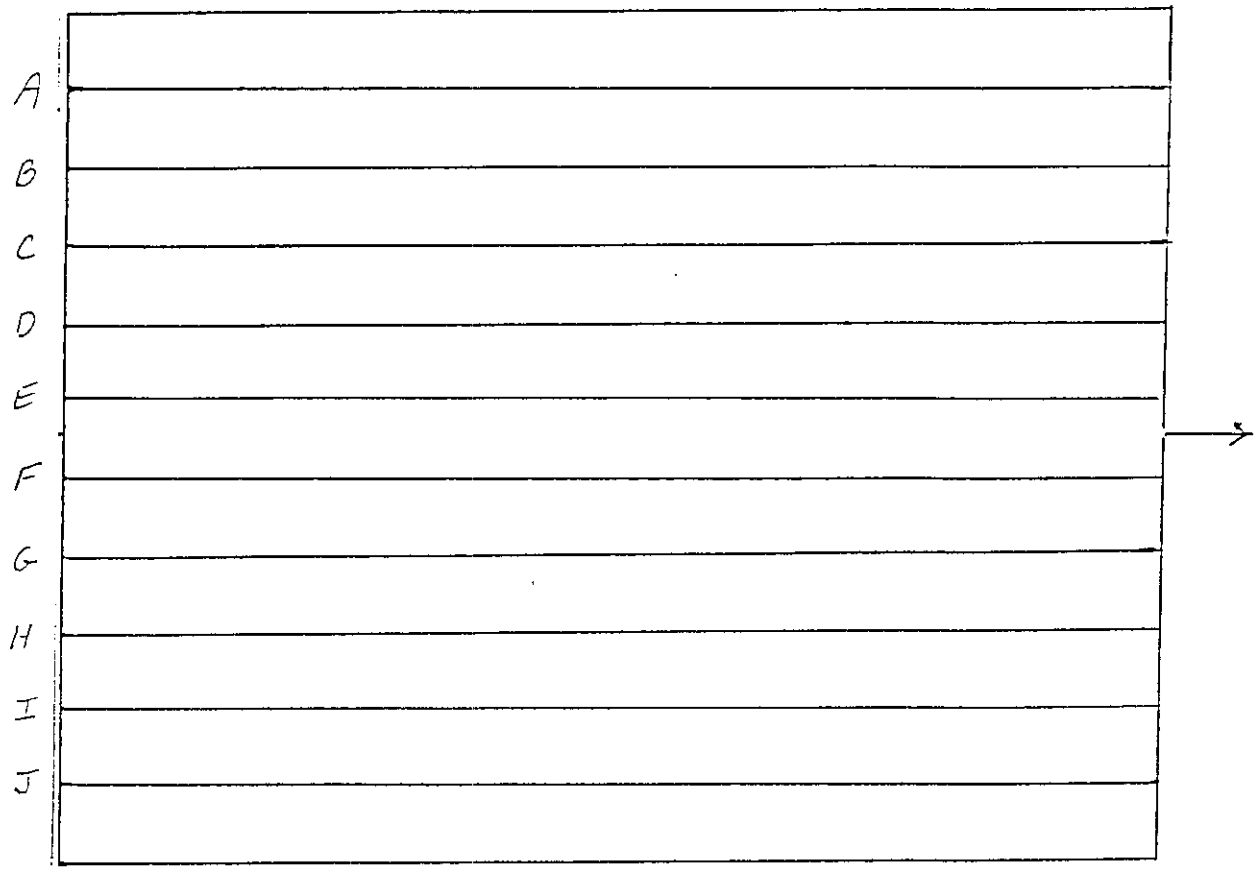

BOTTOM SLAB = 4 Br. = 80-I40-17.13 LT

Deck	UI	
Diaph.	N/A	
Beams	✓	

6-11-99 BE

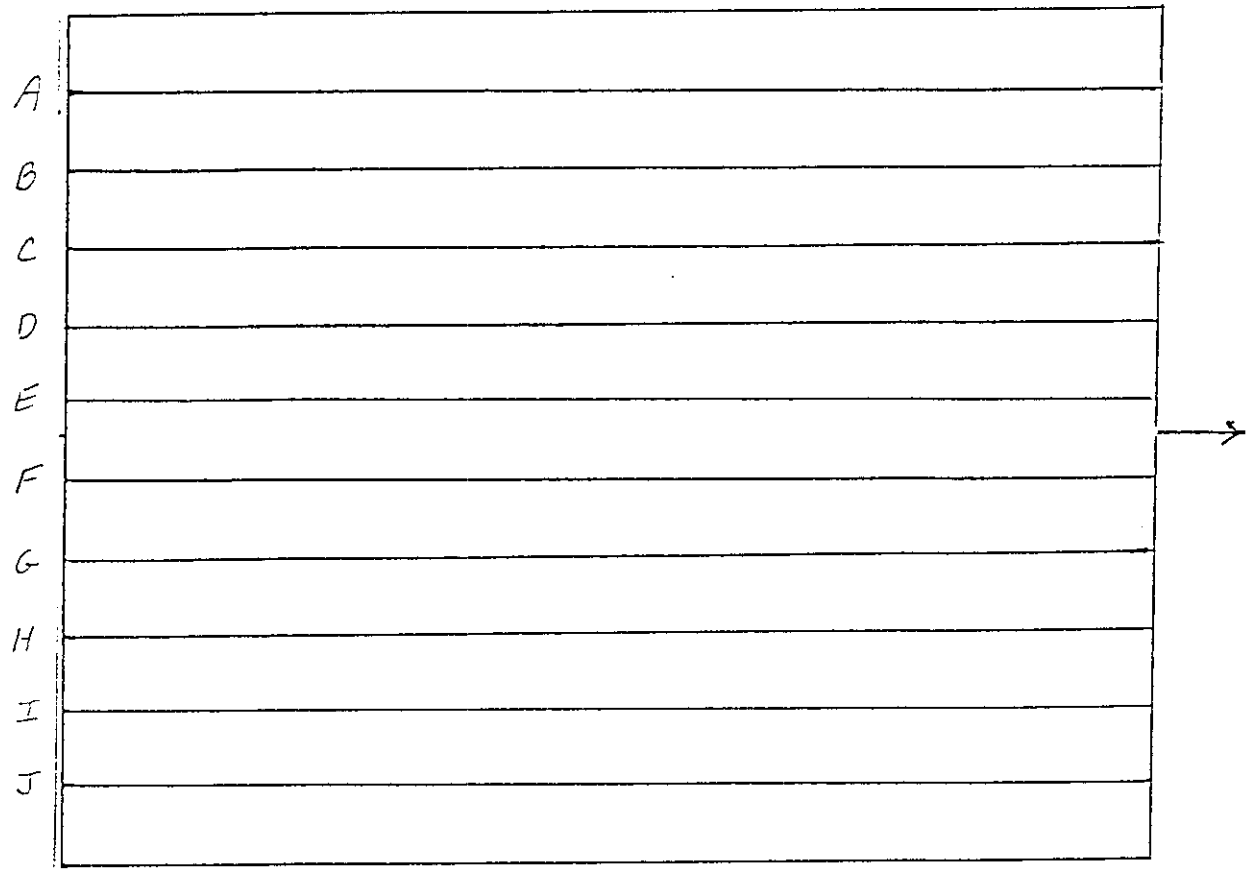

Bottom Slab #3 Br. #80-I40-17.13 LT

Deck	UI	
	N/A	
Diaph.	N/A	
Beams	OK	

6-17-97 BD

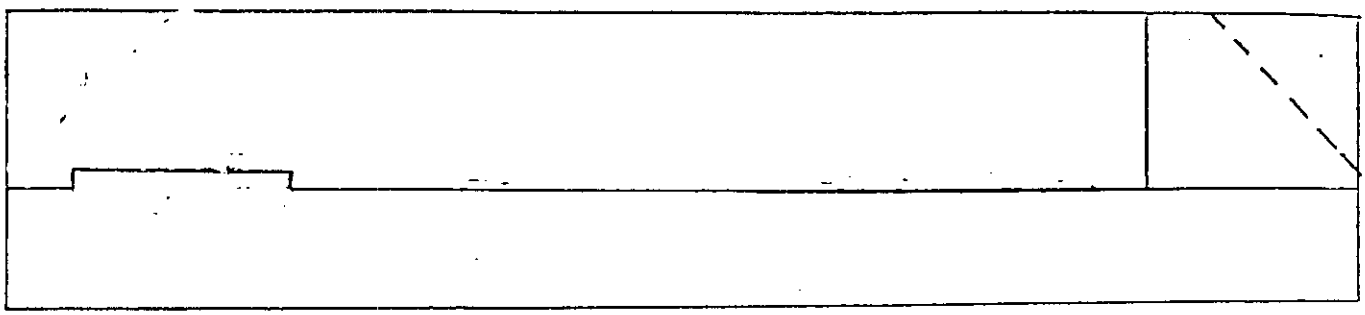

ABUT = 1 Br. = 80 - T40 - 17.13 LT

Back wall	N/V	
CAP	G	
wings	G	
Bearings	G	

PIER NO.____ FRONT SIDE PAGE NO.___

80 COUNTY | 1-40 ROUTE | 17.13L LOG MILE

DATE 6-17-99 B.P.

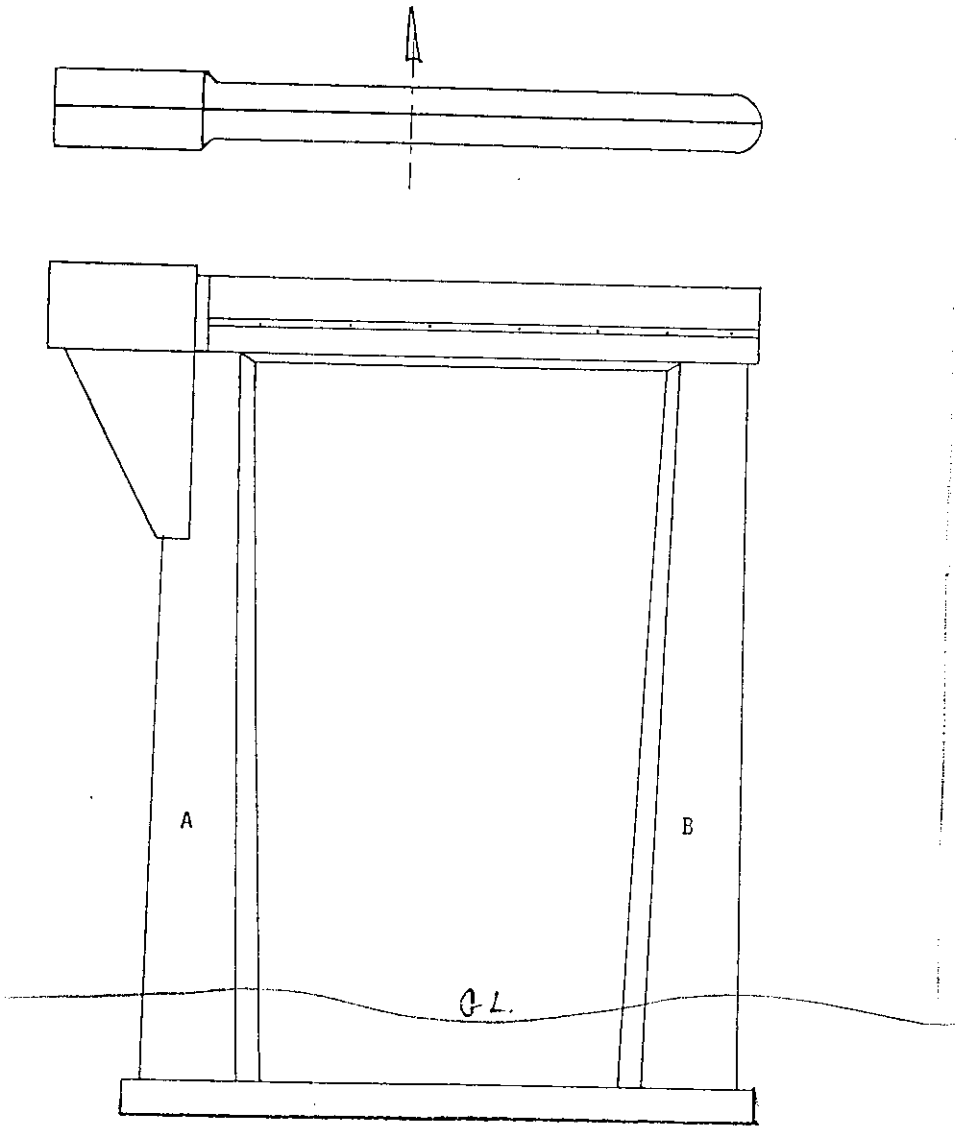

BEARING	G
BR. SEAT	N/✓
CAP	G
PIER WALL	G

FILE NO.____ PAGE NO.____

BACK Side

80 COUNTY | 1-40 ROUTE | 17.13 LT LOG MILE | DATE 6-17-99 BA

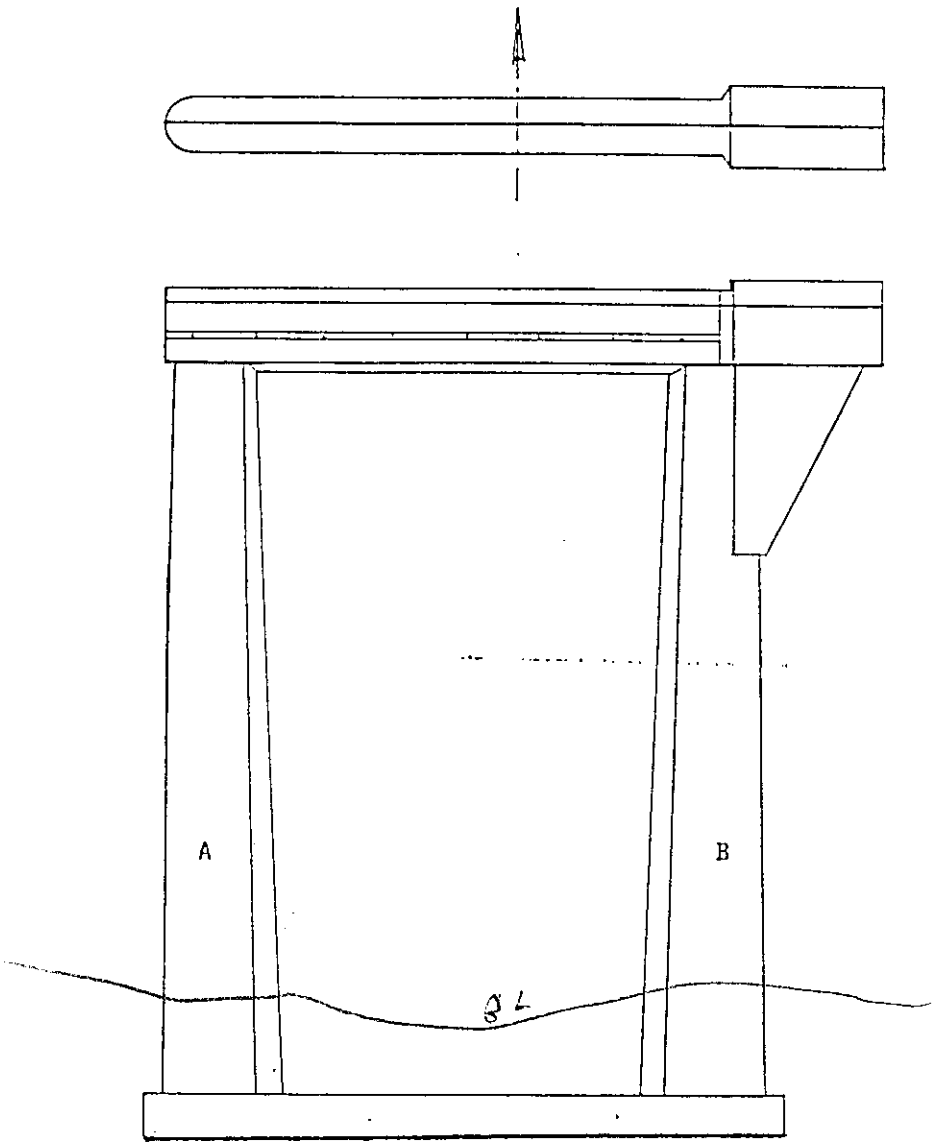

BEaring	G	
BR. Seat	N/V	
CaP	G	
PierWall	G	

PIER NO._____ FRONT SIDE PAGE NO.___

80 COUNTY | 1-40 ROUTE | 17.13L LOG MILE

DATE 6-17-99 B.O

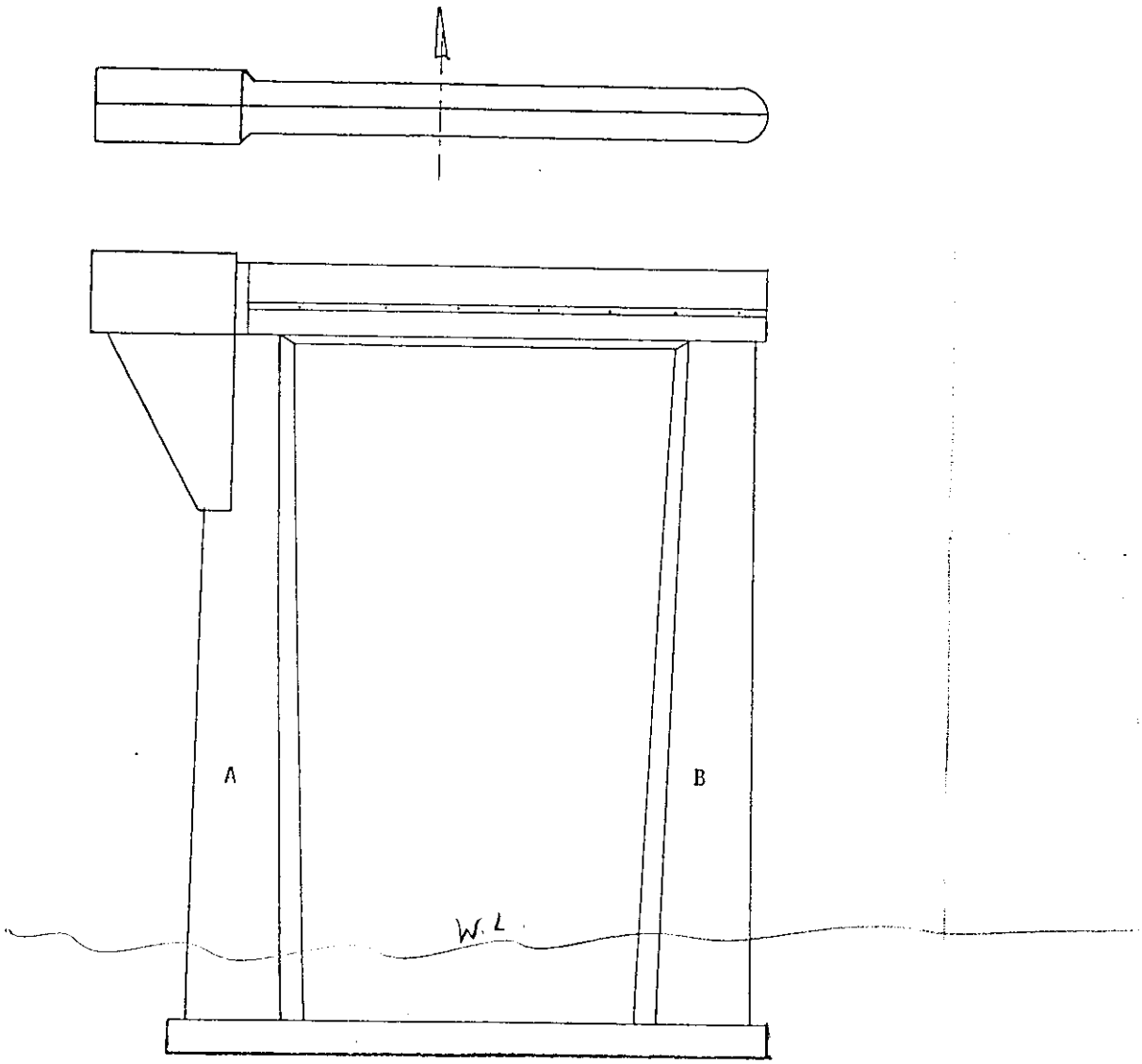

BEARING	G	
BR. SEAT	N/V	
CAP	G	
PIER WALL	G	

PIER NO. ___ PAGE NO. ___

BACK Side

80	1-40	17.13 LT	DATE 6-17-99
COUNTY	ROUTE	LOG MILE	

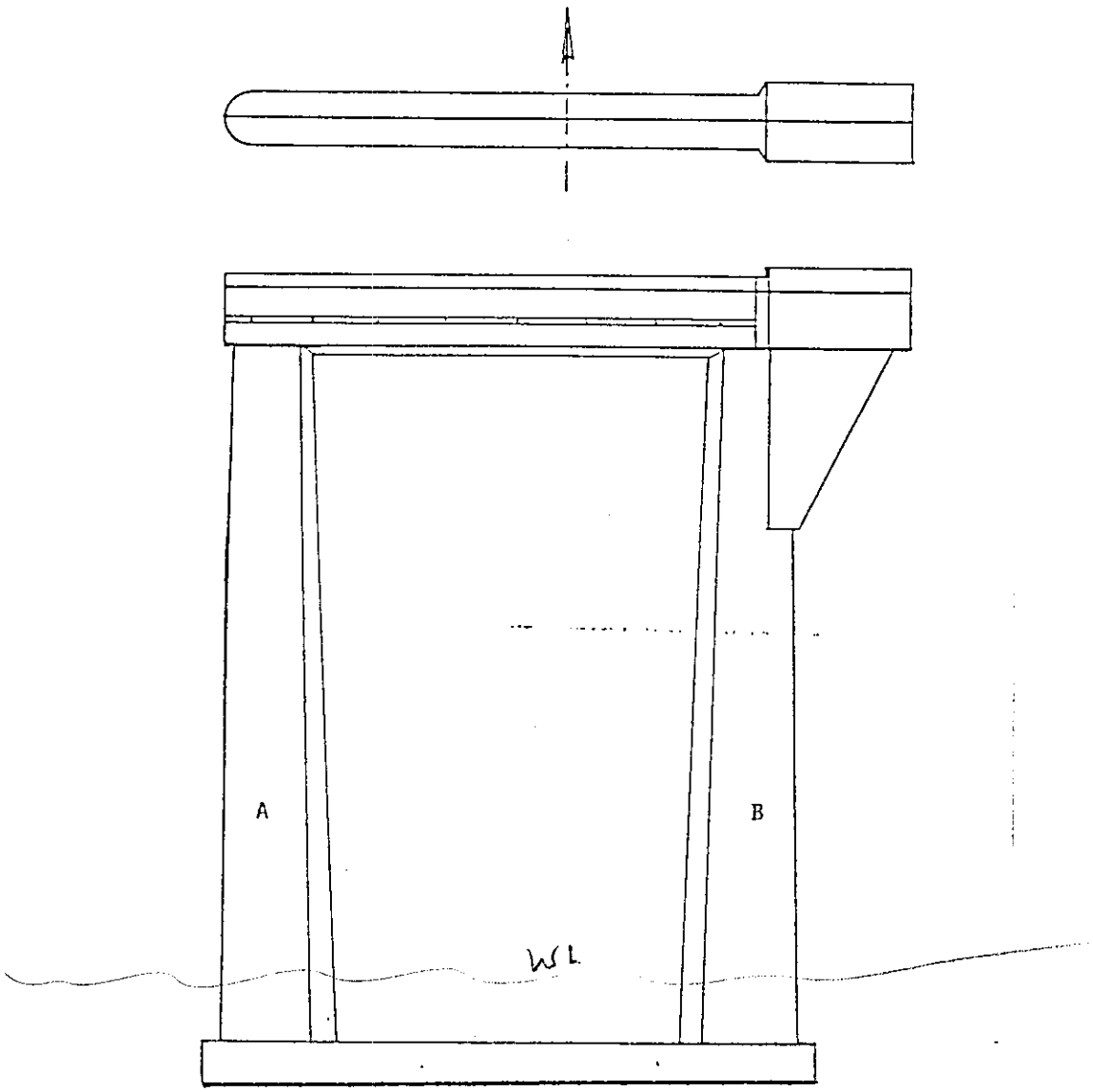

BEaring	G	
BR. Seat	N/V	
CaP	G	
PierWall	G	

PIER NO._____ FRONT SIDE PAGE NO.___

80	1-40	17.13L
COUNTY	ROUTE	LOG MILE

DATE 6-17-99 BP

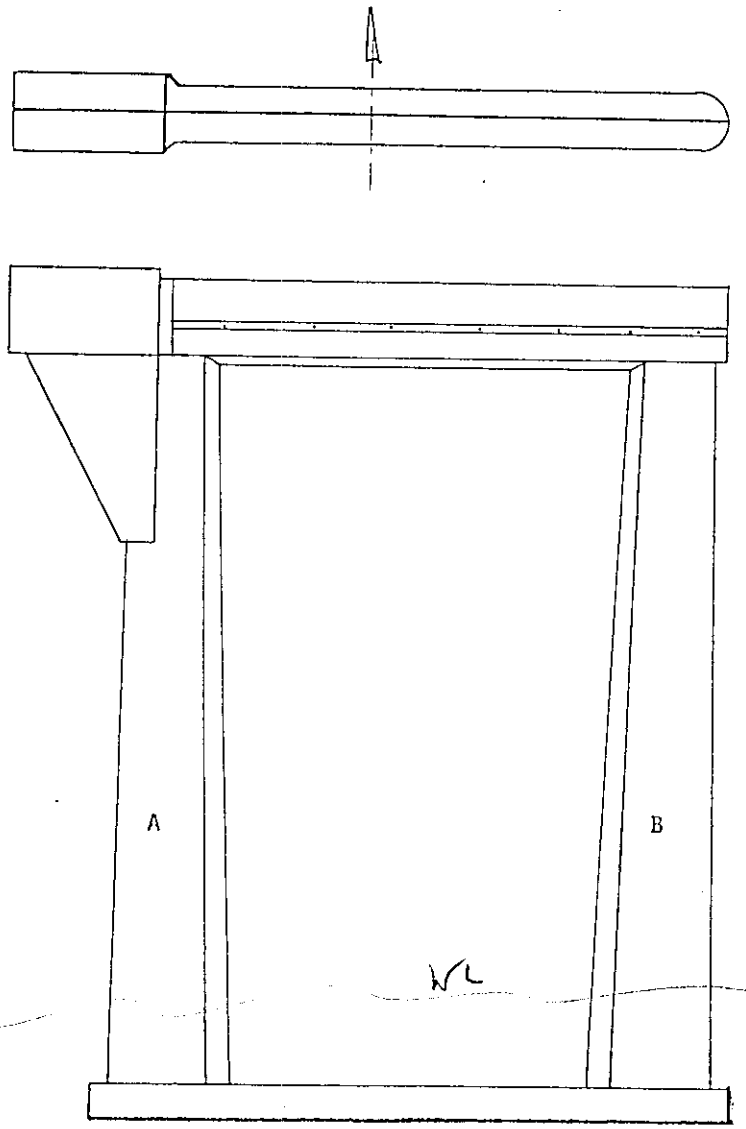

BEARING	G	
BR. SEAT	N/V	
CAP	G	
PIER WALL	G	

PIER NO.__ _ PAGE NO.___

BACK Side

80 COUNTY | 1-40 ROUTE | 17.13 LT LOG MILE | DATE 6-17-99 BR

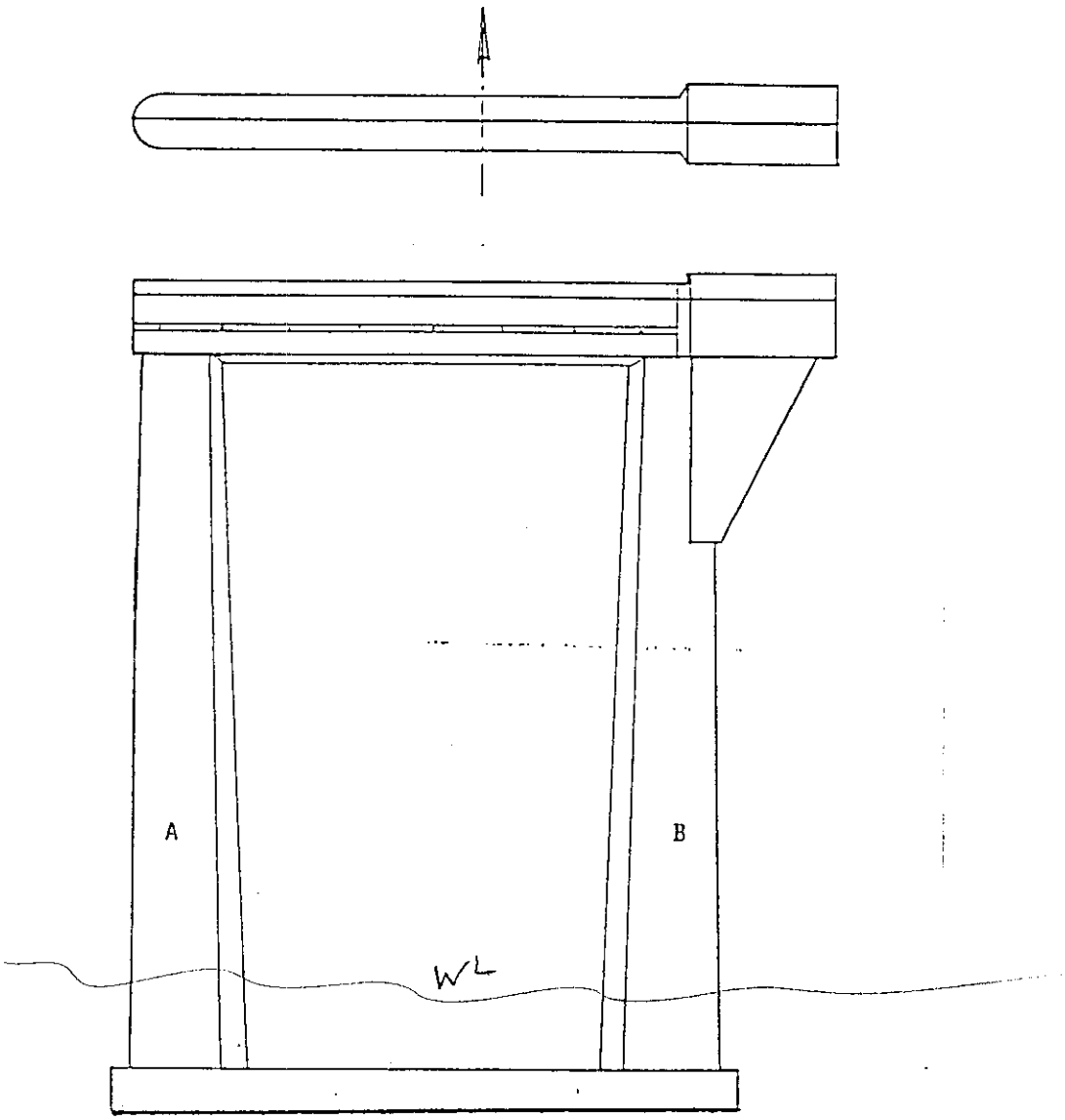

BEaring	G	
BR. Seat	N/V	
Cap	G	
PierWall	G	

6-17-97 B.P.

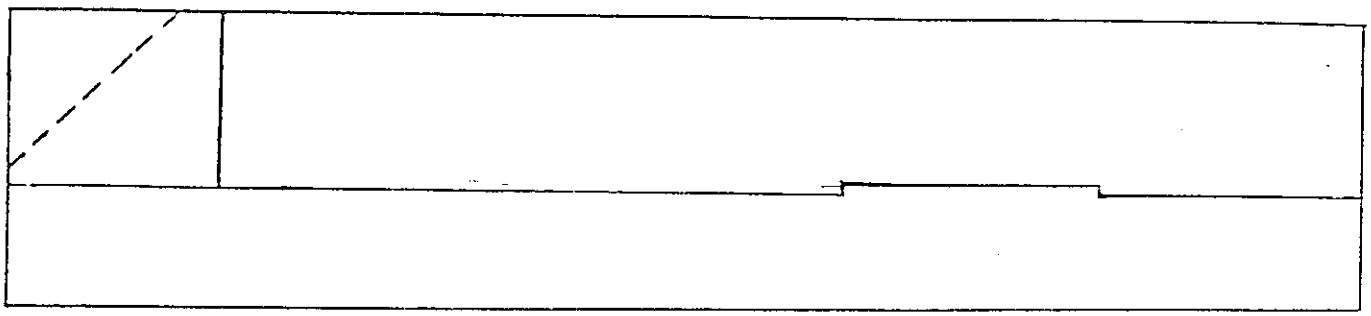

ABUT #2 Br. # 80-I40-17.13 LT.

Back wall	N/A
CAP	G
wings	G
Bearings	G

CONSTR. NO. 80001-3152-44

PROJECT NO.	YEAR	SHEET NO.
IR-40-5(91)257	1989	

REVISIONS

NO.	DATE	BY	BRIEF DESCRIPTION
1	6/12/89	WHP	ELIMINATED PREVIOUS NOTE, ADDED NEW NOTE
2	9/29/89	DWT	Constr. Jt. Added

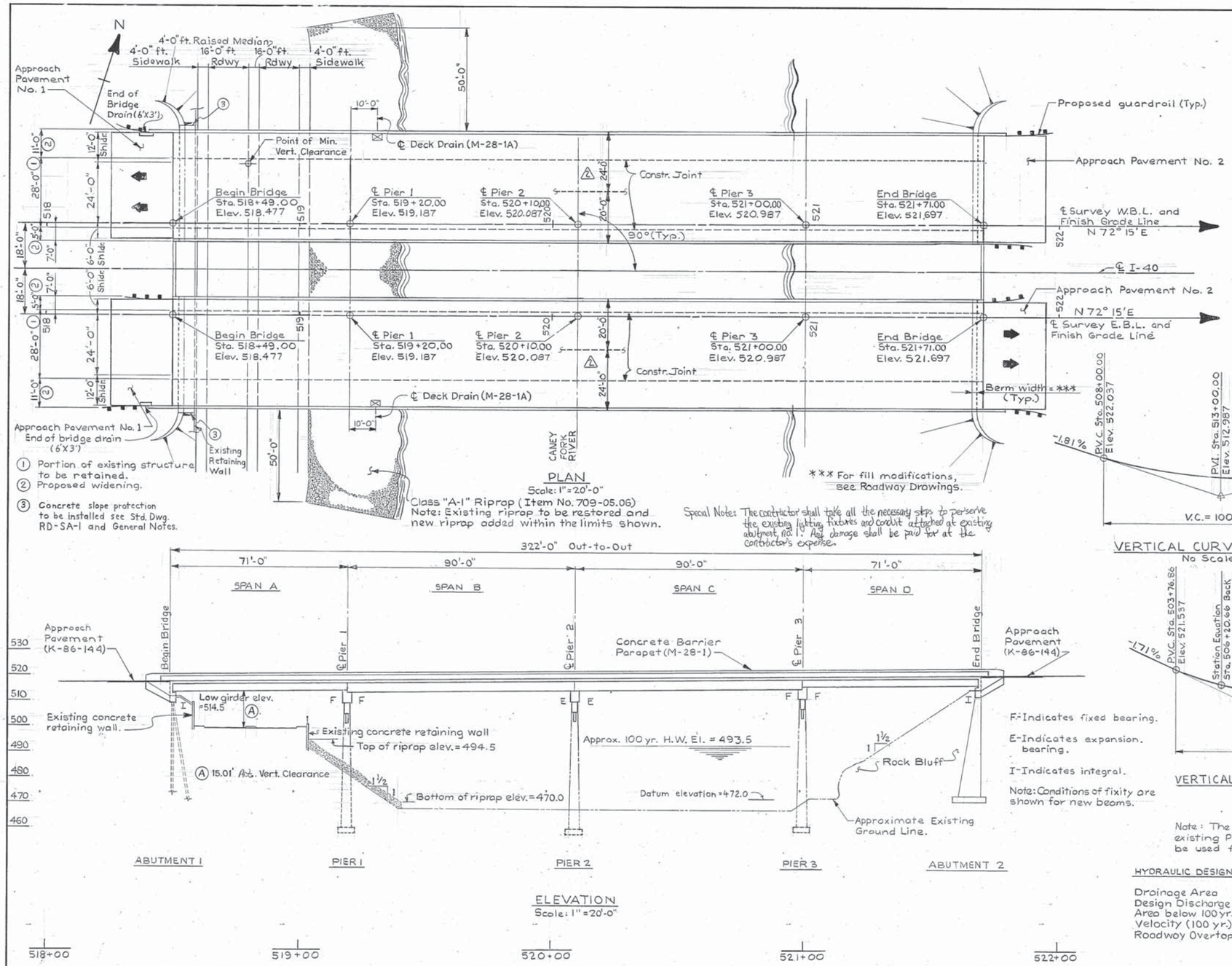

① Portion of existing structure to be retained.
② Proposed widening.
③ Concrete slope protection to be installed see Std. Dwg. RD-SA-1 and General Notes.

PLAN
Scale: 1" = 20'-0"

Special Note: The contractor shall take all the necessary steps to preserve the existing lighting fixtures and conduit attached at existing abutment no. 1. Any damage shall be paid for at the contractor's expense.

Bench Mark:
Top of wing Leftside of Abutment No. 1 - EBL
Elev. = 518.91.

Notes:
For Roadway Data not shown, see Roadway Plans.

Denotes direction of one lane of traffic.

⚠ NOTE: FOR CONSTRUCTION SEQUENCE SEE DWG. NO. M-214-59A.

2009 ADT = 30,000

Design Velocity = 65 mph

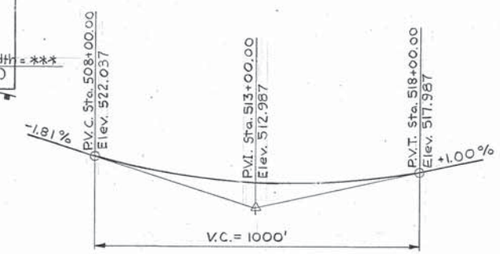

VERTICAL CURVE DATA E.B.L.
No Scale

Note: The contractor shall perform all possible work as determined by the engineer prior to traffic being detoured.

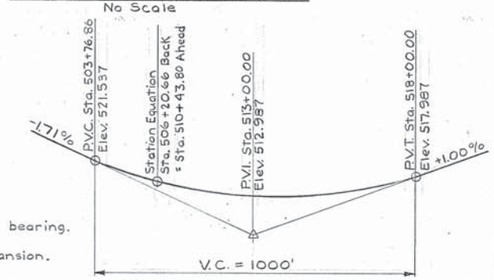

VERTICAL CURVE DATA W.B.L.
No Scale

Note: The grades shown are based on existing Plans grade plus .417' and shall be used for bridge construction only.

ELEVATION
Scale: 1" = 20'-0"

F - Indicates fixed bearing.
E - Indicates expansion bearing.
I - Indicates integral.
Note: Conditions of fixity are shown for new beams.

HYDRAULIC DESIGN DATA

Drainage Area	=	169.0 Sq. Miles
Design Discharge (100 yr.)	=	30,000 cfs
Area below 100 yr. Elevation	=	5,000 sq. ft.
Velocity (100 yr.)	=	6.0 fps
Roadway Overtopping Elev.	=	515.7

WILLIAM S. HUFFSTETLER
REGISTERED ENGINEER
No. 013818
STATE OF TENNESSEE
William S. Huffstetler
WILBUR SMITH ASSOCIATES

BRIDGE NO. 6

STATE OF TENNESSEE
DEPARTMENT OF TRANSPORTATION
BUREAU OF HIGHWAYS

LAYOUT OF BRIDGE WIDENING
I-40 OVER
CANEY FORK RIVER
STA. 518+49.00 ℄ SURVEY E.B. & W.B. I-40
BRIDGE ID # E.B.L. 80100400035
BRIDGE ID # W.B.L. 80100400036
SMITH COUNTY
1989

DESIGNED BY	DWT	DATE	9-88
DRAWN BY	HJK	DATE	9-88
SUPERVISED BY	WSH	DATE	9-88
CHECKED BY	DWT	DATE	9-88

CORRECT _____ ENGINEER OF STRUCTURES

APPROVED _____ DIRECTOR OF HIGHWAYS

M-214-153

CLASS "A", GRADING "D" = 30 C.Y.

W.S.A. No. DTNOXX024A

ZFILE0L,24:DTNOXX024.DGN;1
DTNOXX
8-MAR-1989 15:01

LIST OF DRAWINGS	DRAWING NO.	LATEST REV. DATE
Layout of Bridge Widening	M-214-153	
General Notes	M-214-154	
Estimated Quantities	M-214-155	
Repair Details	M-214-156	
Superstructure Details	M-214-159	
Prestr. Conc. Box Beam spans A&D	M-214-160	
Prestr. Conc. Box Beam spans B&C	M-214-161	
Abutment Details (1)	M-214-162	
Abutment Details (2)	M-214-163	
Abutment Details (3)	M-214-163A	
Pier 2 W.B.L. & E.B.L.	M-214-164	
Piers 1,2 & 3 W.B.L. & E.B.L.	M-214-164A	
Piers 1 & 3 W.B.L. & E.B.L.	M-214-164B	
Bill of Steel	M-214-165	
Bill of Steel	M-214-166, 166A △	
Bar Bending Details	M-214-167	
△① Construction Sequence	M-214-52A △①	
Existing Bridge Drawings	G-15-127 thru G-15-137, G-10-99	

*Note: Only Existing Dwg. G-15-127 to be printed with Plans

Note: Drawing Nos. M-214-157 & M-214-158 not used.

STANDARD DRAWINGS

Std. Reinf. Bar Support	K-80-14	08-27-76
Misc. Abutment & Drainage Details	K-85-150	06-25-87
Pneumatic Concrete Repairs	K-86-4	02-05-73
Reinf. Concrete Pavement at Bridge Ends	K-86-144	07-17-81
*Bridge Railing-Concrete Parapet	M-28-1	11-01-88
*Concrete Median Barrier and Parapet Drains	M-28-1A	09-08-87
~~Guardrail Attachment to Bridges~~	~~M-131-143~~	
Slope Protection	RD-SA-1	01-31-84

* Asterisk denotes these standards to be printed with plans.

LIST OF SPECIAL PROVISIONS

SPECIAL PROVISION NUMBER	Date LATEST REVISION	LIST OF SPECIAL PROVISIONS
105A	07-21-87	Regarding Approval of Shop Drawings
602	~~05-30-85~~ 05-15-89	Regarding Section 602 Steel Structures
603A	11-01-88	Regarding Painting
604	11-06-87	Regarding Concrete Structures
604C	01-26-88	Regarding Structural Concrete
604R	01-20-89	Regarding Rideability of Bridge Decks and Roadway Approaches
~~607D~~	~~02-20-85~~	~~Regarding Side Drains and Bridge Drains~~
709	05-04-87	Regarding Machined Rip-Rap
907A	03-25-85	Regarding Epoxy Coated Reinforcing Steel

△① Stage Construction - Abutments Bridge No. 1, 3 & 6 M-214-52A

DESIGNED BY HDL DATE 12/88
DRAWN BY TLK/EAB DATE 12/88
SUPERVISED BY WSH DATE 12/88
CHECKED BY HDL DATE 3/89

GENERAL NOTES

SPECIFICATIONS: Standard Road and Bridge Specifications of the Tennessee Department of Transportation. (March 1981 Edition)

LOADING: HS20-44 with Alternate Military.

DESIGN SPECIFICATIONS: AASHTO 1983 Edition with addenda.

CONCRETE: To be class 'A'. f'c to be 4,500 psi for superstructure concrete and 3,000 psi for substructures and parapets.

Class A Concrete for bridge decks shall be in accordance with Section 604 of the Standard Specifications except as modified by Special Provisions 604-C.

BRIDGE DECK SURFACE FINISH: To be in accordance with Note (C) sheet 2 of Special Provisions 604.

BRIDGE DECK FORMS: Bridge Deck Forms for concrete decks shall be constructed using removable forms only. The contractor shall take steps to assure the stability of the exterior girder against twisting or overturning during slab pouring operations. When the width of the overhang exceeds the depth of the exterior girder, details and design calculations for the cantilever support system shall be submitted to the Engineer for approval.

REINFORCING STEEL: To be ASTM A615 Grade 60. Standard CRSI hook details apply unless otherwise noted on Bill of Steel. Spacing dimensions are center to center and cover dimensions are clear distance unless otherwise noted. Placing Tolerances are +/-1/2" for spacing and -1/8" or + 3/8" for cover. The suffix E, for bars so marked, denotes epoxy coated reinforcement. See Special Provisions 907A.

BRIDGE RAIL SYSTEM: Build parapets according to Standard DRAWING M-28-1.

GROUTED BARS IN DRILLED HOLES: Horizontally drilled holes shall be drilled 1/2" in diameter larger than the bar, cleaned, packed with non shrink grout and driven to its seat. Vertically drilled holes shall be drilled 1/4" in diameter larger than the bar, cleaned, packed with epoxy grout and driven to its seat. All grouting material shall be approved by T.D.O.T. Materials and Tests.

SHOP DRAWINGS: See Special Provision No. 105A.

DRILLED-IN ANCHORS:
Certification: The contractor shall furnish certified anchor pull out data from an independent testing laboratory using Class 'A' concrete as prescribed by Tennessee Highway Specifications. The required ultimate load for 7/8" dia. Anchor is 19,000 lbs., 18,000 lbs. for 3/4" dia. Anchors, 12,000 lbs. for 5/8" dia. Anchors and 9,000 lbs. for 1/2" dia. Anchors. In Place Requirements: The units shall be sub-set 3/32" to 1/4" and torqued, with base plate in place, to an equivalent direct pull out load of 60 percent of required ultimate load. Slippage shall not exceed 1/4". The Department will perform testing of Anchors on site to insure the specified in place requirements. Installations not meeting these requirements must be corrected at the contractors expense.

NON-PAY ITEMS: Only items shown on the proposal as pay items will be paid for. Compensation for all labor, materials, tools, equipment, and incidentals for the entire contract shall be included in the price bid for pay items.

FINISHING CONCRETE SURFACES: Concrete finishing shall be in accordance with Section 604.22 of the Tennessee Standard Specification. An Applied Texture Finish shall be used in lieu of a Class II finish. The color of the finish shall be similar to Mountain Grey, Federal Specification No. 36440, Federal Color Standard No. 595a, and a color sample shall be submitted to the Engineer for approval. No texture finish shall be applied prior to completion of paving and hauling operations at the bridge site. Payment for the Applied Texture Finish shall be under Item 604-04.01 & 604-04.02.

NOTE: The Contractor shall check the location of all existing substructures and verify span lengths before fabricating girders.

RIP-RAP: Machined rip-rap shall be Class A-1 in accordance with Special Provision 709 and shall be paid for under Item 709-05.06 - Ton.

REINFORCED CONCRETE SLOPE PAVING: Pave slopes and exposed earth under bridges with 4" thick cement concrete slab reinforced with No. 4 gage wire fabric @ 6" centers and 58 lb. per 100 s.f. The wire fabic reinforcement shall be placed at one-half the depth of the slab and extend to within 3" of its edge with a 12" lap required on all sheets. The cost of the wire fabric reinforcement to be included in the unit price bid for Item 709-04, Reinforced Concrete Slope Pavement. One-half inch premoulded expansion joints without load transfer shall be formed about all structures and features projecting through, in or against the slab. The slab shall be grooved parallel with and at right angles to the under roadway center line at 6' centers. Depth of groove to be not less than 1". See Std. Drawing RD-SA-1 for limits of slope protection.

STRUCTURAL STEEL: See notes on Drawing No. M-214-164A.

WELDING: See Special Provisions No. 602 and notes on Drawing No. M-214-164A.

PAINT: System B - Inorganic zinc - Urethene Finish Bright Green Top Coat - See Tennessee Standard Specification 603.05(b) and Special Provision 603A.

RADIOGRAPHIC, ULTRASONIC, AND MAGNETIC INSPECTION: See Special Provision No. 602. Notes on Drawing No. M-214-164A.

STEEL STRUCTURES: See Tennessee Standard Specifications Section 602 and notes on Drawing No. M-214-164A.

NOTE: The Contractor shall accept full responsibility of maintaining the structural integrity of the existing bridge during construction. Any damage to structural members to be left in place shall be repaired to the satisfaction of the Engineer and paid for at the Contractor's expense.

TESTING MECHANICAL COUPLERS
In addition to the requirements stated elsewhere within these plans, the Contractor will prepare, under field conditions, two (2) specimens of each size utilized. This will be in addition to required certifications. Each coupled rebar in the specimens shall be a minimum of 30 inches in length. The Department will test, at their discretion, each specimen to 125% of the specified tension yield strength of the rebar prior to coupler approval.

CONSTR. NO. 80001-3152-44

PROJECT NO.	YEAR	SHEET NO.
IR-40-5(91)257	1989	

REVISIONS

NO.	DATE	BY	BRIEF DESCRIPTION
1	6/12/89	WHP	ADDED DWG. NO. M-214-59A
△	5/25/89	DWT	M-214-52A & M-214-166A Added

Note:
Textured Coating shall be applied as shown to areas of superstructure and substructure exposed to view, including Abutments and Wingwalls.

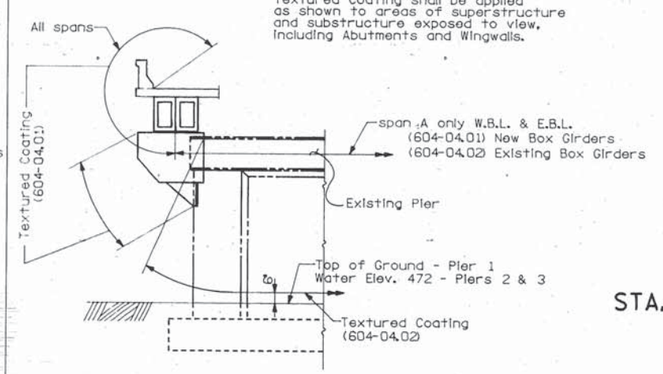

DETAIL SHOWING LIMITS OF TEXTURED COATING

STATE OF TENNESSEE
DEPARTMENT OF TRANSPORTATION
BUREAU OF HIGHWAYS

GENERAL NOTES
I-40 OVER CANEY FORK RIVER
STA. 518+49.00 ℄ SURVEY
E.B. & W.B. I-40
SMITH COUNTY

CORRECT _____ ENGINEER OF STRUCTURES
APPROVED _____ DIRECTOR OF HIGHWAYS

M-214-154

U.S.A. No.: DTNOXX025A

ZFH58L2430TNOXX025.DGN
DTNOXX
8-MAR-1989 13:42

(1) NOTE: Square yard for pavement at bridge ends shall be measured as road surface area and shall include all concrete, reinforcing steel, piles, joint material, notch for roadway drain, surface finish as per SP604 and any other incidentals necessary for complete installation.

(2) NOTE: Cost of 2 bridge deck drains to be included in the unit price bid for Class 'A' Concrete (Bridge Deck). For Drain Locations, see Dwg. No. M-214-153.

(3) NOTE: Cost of Elastomeric pads, rubber bonding cement, and dowel bars to be included in the cost of prestressed beam.

(4) NOTE: The cost of 14 insert assemblies and 56-7/8" dia. x 4' hex head bolts, (A307), to be included in Item M-28-1.

(5) NOTE: The cost of removing the exterior portion of the existing slab, portions of the existing abutment, and the bridge rail shall be included in the unit price bid for Item 202-04.06.

(6) All reinforcing steel in the parapet shall be epoxy coated. Cost to be included in the price bid for Item 620-03.

(7) The cost of removing any existing asphalt overlay shall be included in the unit price bid for scarifying.

(8) NOTE: Cost of polyethylene sheeting and all miscellaneous items necessary for installation to be included in cost of perforated Pipe.

(9) Bridge ID# - E.B.L. 80I00400035(Sta. 518+49.00)
Bridge ID# - W.B.L. 80I00400036(Sta. 518+49.00)

(10) Support frames for Pier Extension.

(11) Note: Items 604-10.30, 604-10.42, 604-10.50, 622-01 and 709-05.06 shall be bid with the contingency that these items may be increased, decreased or eliminated by the Engineer.

(12) Excavation based on existing ground.

(13) For sketches and notes on Concrete Repair, see drawing No. M-214-156.

(14) The use of a ramhoe is prohibited for removal of concrete. See notes on Dwg. No. M-214-156.

(15) ~~Guardrail attachment to bridge rail post shall be prior to all traffic being detoured onto Westbound Bridge. All materials, labor, etc. for installation shall be included under Item 705-10.23.~~

(16) Includes quantities for Abutment Sub-beam, see Dwg. M-214-156.

CONSTR. NO. 80001-3152-44

PROJECT NO.	YEAR	SHEET NO.
IR-40-5(91)257	1989	

REVISIONS

NO.	DATE	BY	BRIEF DESCRIPTION
1	9/29/89	DWT	Revised Rebar

ESTIMATED QUANTITIES

	BID ITEM NO. / ITEM / STRUCTURE	202-04.06 REMOVAL OF STRUCTURES (5)(9)(14) L.S.	204-02.01 DRY EXCAVATION (BRIDGES) (12) C.Y.	602-02.06 STRUCTURAL STEEL (9)(10) LB.	604-01.12 CLASS 'A' CONCRETE (BRIDGE DECK) (2) ⚠ C.Y.	604-02.03 EPOXY COATED REINFORCING STEEL (16) LB. ⚠	604-03.01 CLASS 'A' CONCRETE (BRIDGES) (16) C.Y. ⚠	604-03.02 STEEL BAR REINFORCEMENT (BRIDGES) LB. ⚠	604-03.04 PAVEMENT AT BRIDGE ENDS (1) S.Y.	604-04.01 APPLIED TEXTURE FINISH (NEW STRUCTURES) S.Y.	604-04.02 APPLIED TEXTURE FINISH (EXISTING STRUCTURES) S.Y.	604-10.30 BRIDGE DECK REPAIR (FULL DEPTH) (11)(13) S.Y.	604-10.42 CONCRETE REPAIRS (11)(13) C.F.	604-10.50 BRIDGE DECK REPAIR (PARTIAL DEPTH) (11)(13) S.Y.	604-36 SCARIFYING (7) S.Y.	615-02.04 PRESTRESSED CONCRETE BOX BEAM (27" X 36") (3) L.F.	615-02.21 PRESTRESSED CONCRETE BOX BEAM (39" X 36") (3) L.F.	620-03 CONCRETE PARAPET (M-28-1) (4)(6) L.F.	622-01 PNEU-MATICALLY PLACED CONCRETE (11)(13) S.F.	~~705-10.23 GUARDRAIL ATTACHMENT TO BRIDGE RAIL POST (15) L.F.~~	709-04 REINFORCED CONCRETE SLOPE PAVEMENT C.Y.	709-05.06 MACHINED RIP-RAP (CLASS A-1) (11) TON	710-09.01 6" PERF. PIPE WITH VERTICAL DRAIN SYSTEM (8) L.F.	710-09.02 6" PIPE UNDERDRAIN (8) L.F.
WEST BOUND LANE	Superstructure				311	49168				988	517		3			280	359							60	12
	Abutment 1		59		14	1654	9	2342		6	23								80						
	Pier 1			3600			14	2660		29	312														
	Pier 2			3600			13	2583		29	313														
	Pier 3			3600			14	2660		29	325		1											60	12
	Abutment 2		47		11	2254	7	5176		10	28														
	Subtotal	.5	106	10800	336	53076	57	15421	220	1091	1518	12	4	115	1145	280	359	658	80		17	70	120	24	
EAST BOUND LANE	Superstructure				311	49168				988	517		1			280	359								
	Abutment 1		59		14	1654	9	2342		6	23													60	12
	Pier 1			3600			14	2660		29	312		5						20						
	Pier 2			3600			13	2583		29	313								160						
	Pier 3			3600			14	2660		29	325								80						
	Abutment 2		47		11	2254	7	5176		10	28													60	12
	Subtotal	.5	106	10800	336	53076	57	15421	220	1091	1518	11	6	115	1145	280	359	658	260		17	70	120	24	
	Totals	1.0	212	21600	672	106152	114	30842	440	2182	3036	23	10	230	2290	560	718	1316	340		34	140	240	48	

STATE OF TENNESSEE
DEPARTMENT OF TRANSPORTATION
BUREAU OF HIGHWAYS

ESTIMATED QUANTITIES
I-40 OVER
CANEY FORK RIVER
STA. 518+49.00
℄ SURVEY E.B. & W.B. I-40
SMITH COUNTY

DESIGNED BY HDL DATE 12/88
DRAWN BY TLK/EAB DATE 12/88
SUPERVISED BY WSH DATE 12/88
CHECKED BY HDL DATE 3/89

CORRECT _____ ENGINEER OF STRUCTURES
APPROVED _____ DIRECTOR OF HIGHWAYS

M-214-155

W.S.A. No. DTN0XX703A

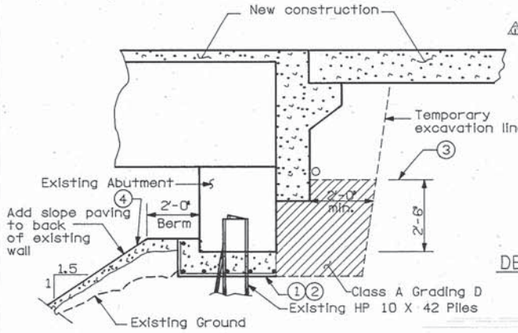

SECTION THRU W.B.L. ABUTMENT 1

SECTION THRU E.B.L. ABUTMENT 1

⚠ Note: Temporary shoring maybe required in order to accomplish phase construction.

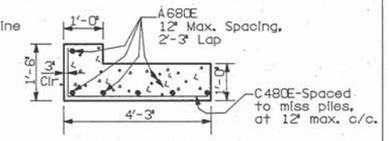

DETAILS OF NEW ABUTMENT SUB-BEAM

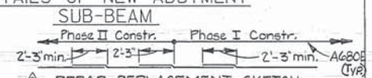

⚠ REBAR REPLACEMENT SKETCH

NOTES:

1. Before addition of new approach pavement, backfill shall be excavated sufficient to expose front and back of all piles. Vehicular and construction loads will not be permitted on the constructed portion of the bridge during this operation. Corroded areas shall be wire brushed or blast cleaned and repainted per Specification Section 606.19. No separate payment will be made for painting or cleaning. ⚠
2. Construct abutment sub-beam using Class 'A', f'c=3,000 psi concrete. Sub-beam shall be cast full length of existing retained abutment beam and to the depth specified, unless otherwise directed by the Engineer. Cost of material and labor shall be included in the bid items 604-03.01 and 604-02.03.
3. Backfill to limit shown with Class A Grading D Material. Install backfill and underdrain in compliance with Std. Drawing K-85-150.
4. Reestablish fill slope to lines shown. Add concrete slope paving per Std. Drawing RD-SA-1. Construction of slope paving to be in accordance with General Notes.

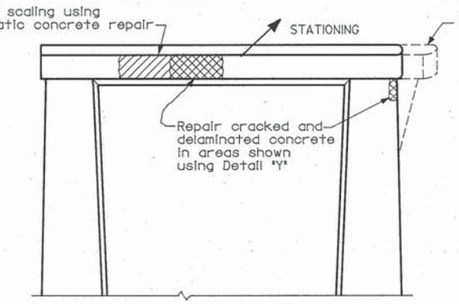

E.B.L. PIER 1 REPAIR

(Looking in Direction of Stationing)

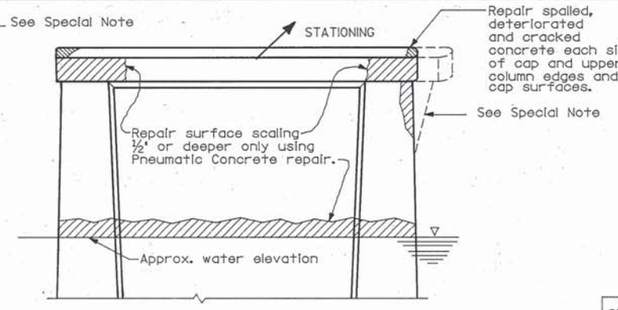

E.B.L. PIER 2 REPAIR

(Looking in Direction of Stationing)

CONSTR. NO. 80001-3152-44

PROJECT NO.	YEAR	SHEET NO.
IR-40-5(91)257	1989	

REVISIONS

NO.	DATE	BY	BRIEF DESCRIPTION
1	6/16/89	WHP	Goddard and Rayford Dates
⚠	9/25/89	DWT	Sketch Added

SPECIAL NOTE

Necessary concrete repairs at piers of this bridge shown before the addition of the cantilever beam bracket. In general, these repairs which may be conflicting or may be obscured by the angle strap will be required to be completed before the addition of the angle support frame and the concrete bracket. However, the necessary surface removal and chipping for the bracket addition will override or preclude the need for surface repairs to some end portions of these piers. The Contractor need not first perform surface or other damage repair within the area limits scheduled for the bracket addition of its strap tie system, as shown by relevant details within these plans. Where these repair details overlap the 'footprint' of the bracket addition, the resulting construction shall have neat and appropriately formed lines and surfaces, regardless of the order of construction. The Contractor will not be paid for any surface repairs within the area bounded by the bracket connection to each pier.

PNEUMATIC CONCRETE REPAIR

Denotes: Areas for pneumatic concrete repair. The areas to be repaired will be sufficiently larger than the spalled areas to insure that patches extend into sound concrete. Care shall be taken when removing existing deteriorated concrete in repair areas so as not to damage existing reinforcing steel. All existing reinforcing exposed shall be blast cleaned to remove all rust before placement of pneumatic concrete.

See Tennessee Standard Specifications Section 622 Pneumatically Placed Concrete and Standard Drawing K-86-4.

Cost of removing all unsound and deteriorated concrete, placing of pneumatic concrete, and all labor and materials necessary for completing the work shall be paid for under Item no. 622-01 Pneumatically Placed Concrete, sq. ft.

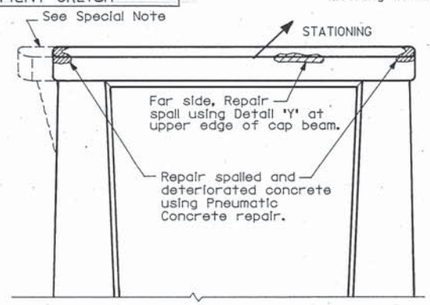

W.B.L. PIER 3 REPAIR

(Looking in Direction of Stationing)

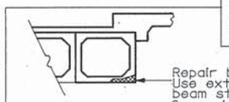

SECTION THRU E.B.L. SPAN 1

EXISTING BM "H" (OUTSIDE BEAM)

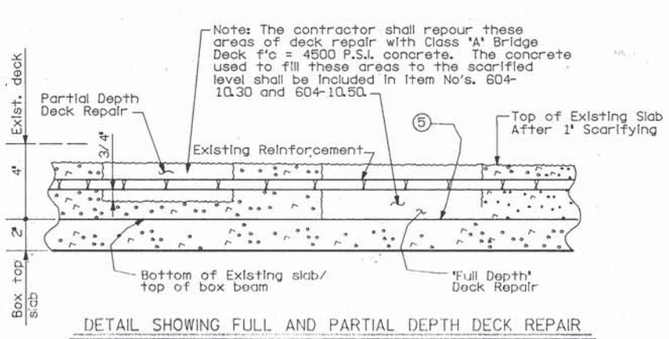

DETAIL SHOWING FULL AND PARTIAL DEPTH DECK REPAIR

Remove Concrete in all delaminated areas to a depth of 3/4" below the top mat of Reinforcing steel. All reinforcing steel in areas of deck repair shall be blast cleaned. Areas of concrete removed shall be designated by personnel from the Division of Structures. Deck repair will be paid for under Item No. 604-10.50, Bridge deck repair, (partial depth of slab) S.Y. If deteriorated concrete is encountered which appears to run full depth of slab, the Engineer may designate these areas to be repaired under Item No. 604-10.30, Brige deck repair, (full depth of slab), S.Y. Power driven hand tools used for removal of unsound concrete in making partial depth repairs are subject to the following restrictions: 1) Pneumatic Hammers heavier than 35 pound class shall not be used. 2) Chipping hammers of the 15 pound class shall be used to remove concrete from beneath any reinforcing steel, and within 1" of top of box beam.

⑤ The Contractor is advised to use extreme care during any attempted full-depth removal, to avoid damaging existing box beam surfaces. Max. depth of box slab chipping shall not exceed ½ inch.

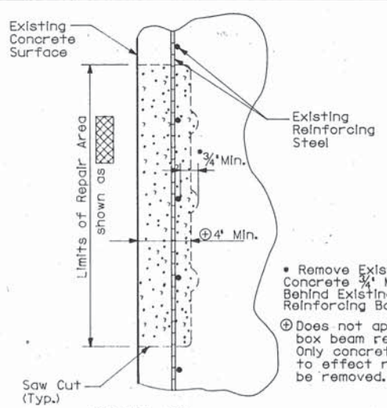

* Remove Existing Concrete 3/4" Min. Behind Existing Reinforcing Bar.

⊕ Does not apply to box beam repair. Only concrete necessary to effect repair shall be removed.

DETAIL "Y"

DETAIL SHOWING EXISTING CONCRETE SURFACE TO BE REPAIRED

NOTES FOR DETAIL Y:

Care shall be taken when removing existing deteriorated concrete in designated repair areas so as not to damage the existing reinforcing steel. All existing reinforcing steel shall be blast cleaned to remove all rust before pouring new concrete.

Concrete for the repaired areas shall be high early strength, f'c = 3,000 p.s.i.; Type III cement shall be used in lieu of Type I cement. ~~No traffic or other loading will be allowed on the repaired areas until 10 calender days have elapsed and representative test specimens have attained a compressive strength of not less than 3,000 p.s.i.~~ ⚠

Cost of removing deteriorated concrete, all blast cleaning, forming, high early strength concrete, labor and all additional materials necessary to complete the repairs as shown in detail shall be included under Item No. 604-10.42, Concrete Repairs, C.F..

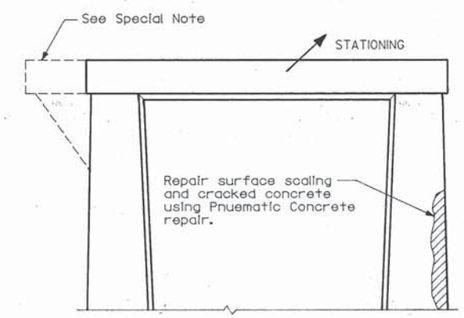

W.B.L. PIER 1 REPAIR

(Looking in Direction of Stationing)

W.B.L. SPAN D BEAM SURFACE REPAIR

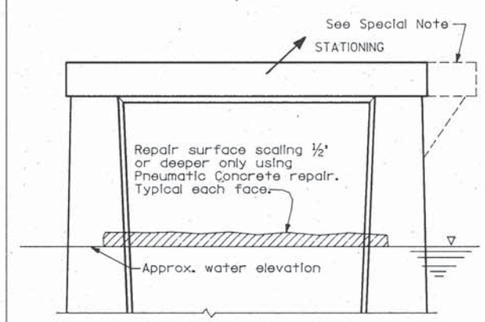

E.B.L. PIER 3 REPAIR

(Looking in Direction of Stationing)

STATE OF TENNESSEE
DEPARTMENT OF TRANSPORTATION
BUREAU OF HIGHWAYS

REPAIR DETAILS
I-40 OVER
CANEY FORK RIVER
STA. 518+49.00 ℄ SURVEY
E.B. & W.B. I-40
SMITH COUNTY
1989

CORRECT _____ ENGINEER OF STRUCTURES

APPROVED _____ DIRECTOR OF HIGHWAYS

M-214-156

DESIGNED BY	WSH	DATE	1/89
DRAWN BY	TLK	DATE	1/89
SUPERVISED BY	WSH	DATE	1/89
CHECKED BY	WSH	DATE	3/89

ZFILE:B240TN0XX703.DGN1 DTN0XX 9-MAR-1989 09:07

W.S.A. No. DTN0XX703A

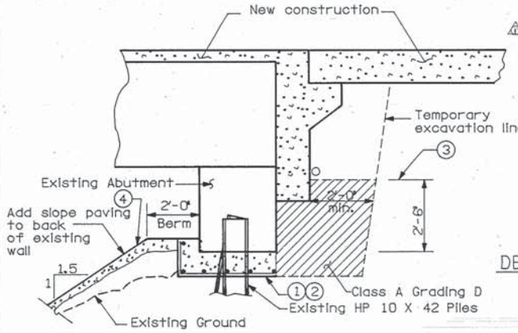

SECTION THRU W.B.L. ABUTMENT 1

SECTION THRU E.B.L. ABUTMENT 1

⚠ Note: Temporary shoring maybe required in order to accomplish phase construction.

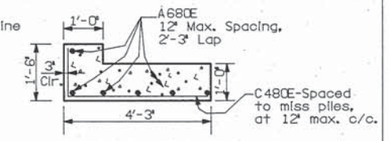

DETAILS OF NEW ABUTMENT SUB-BEAM

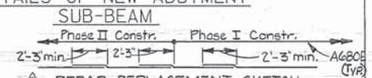

⚠ REBAR REPLACEMENT SKETCH

NOTES:

1. Before addition of new approach pavement, backfill shall be excavated sufficient to expose front and back of all piles. Vehicular and construction loads will not be permitted on the constructed portion of the bridge during this operation. Corroded areas shall be wire brushed or blast cleaned and repainted per Specification Section 606.19. No separate payment will be made for painting or cleaning. ⚠
2. Construct abutment sub-beam using Class 'A', f'c=3,000 psi concrete. Sub-beam shall be cast full length of existing retained abutment beam and to the depth specified, unless otherwise directed by the Engineer. Cost of material and labor shall be included in the bid items 604-03.01 and 604-02.03.
3. Backfill to limit shown with Class A Grading D Material. Install backfill and underdrain in compliance with Std. Drawing K-85-150.
4. Reestablish fill slope to lines shown. Add concrete slope paving per Std. Drawing RD-SA-1. Construction of slope paving to be in accordance with General Notes.

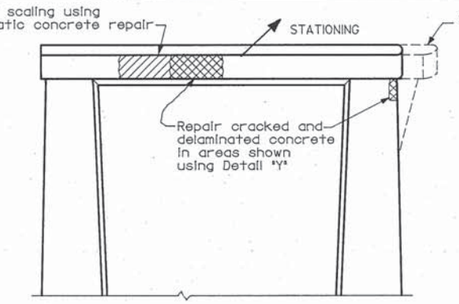

E.B.L. PIER 1 REPAIR

(Looking in Direction of Stationing)

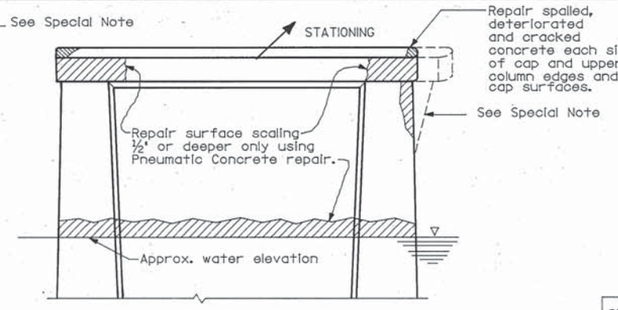

E.B.L. PIER 2 REPAIR

(Looking in Direction of Stationing)

CONSTR. NO. 80001-3152-44

PROJECT NO.	YEAR	SHEET NO.
IR-40-5(91)257	1989	

REVISIONS

NO.	DATE	BY	BRIEF DESCRIPTION
1	6/16/89	WHP	Goddard and Rayford Dates
⚠	9/25/89	DWT	Sketch Added

SPECIAL NOTE

Necessary concrete repairs at piers of this bridge shown before the addition of the cantilever beam bracket. In general, these repairs which may be conflicting or may be obscured by the angle strap will be required to be completed before the addition of the angle support frame and the concrete bracket. However, the necessary surface removal and chipping for the bracket addition will override or preclude the need for surface repairs to some end portions of these piers. The Contractor need not first perform surface or other damage repair within the area limits scheduled for the bracket addition of its strap tie system, as shown by relevant details within these plans. Where these repair details overlap the 'footprint' of the bracket addition, the resulting construction shall have neat and appropriately formed lines and surfaces, regardless of the order of construction. The Contractor will not be paid for any surface repairs within the area bounded by the bracket connection to each pier.

PNEUMATIC CONCRETE REPAIR

Denotes: Areas for pneumatic concrete repair. The areas to be repaired will be sufficiently larger than the spalled areas to insure that patches extend into sound concrete. Care shall be taken when removing existing deteriorated concrete in repair areas so as not to damage existing reinforcing steel. All existing reinforcing exposed shall be blast cleaned to remove all rust before placement of pneumatic concrete.

See Tennessee Standard Specifications Section 622 Pneumatically Placed Concrete and Standard Drawing K-86-4.

Cost of removing all unsound and deteriorated concrete, placing of pneumatic concrete, and all labor and materials necessary for completing the work shall be paid for under Item no. 622-01 Pneumatically Placed Concrete, sq. ft.

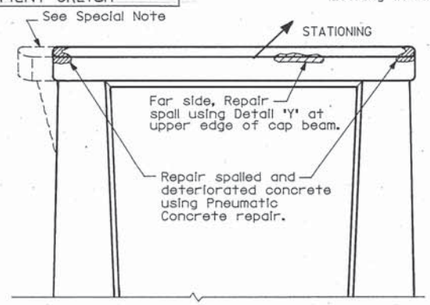

W.B.L. PIER 3 REPAIR

(Looking in Direction of Stationing)

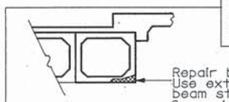

SECTION THRU E.B.L. SPAN 1

EXISTING BM "H" (OUTSIDE BEAM)

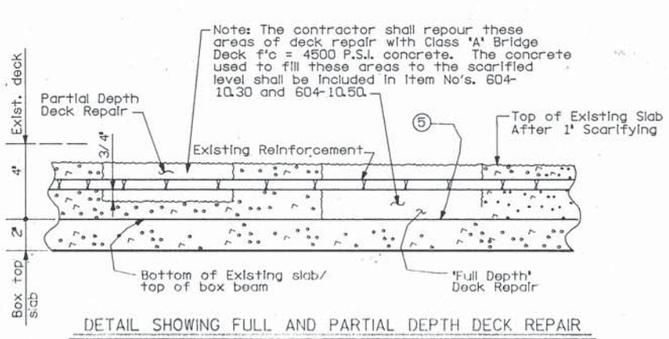

DETAIL SHOWING FULL AND PARTIAL DEPTH DECK REPAIR

Remove Concrete in all delaminated areas to a depth of 3/4" below the top mat of Reinforcing steel. All reinforcing steel in areas of deck repair shall be blast cleaned. Areas of concrete removed shall be designated by personnel from the Division of Structures. Deck repair will be paid for under Item No. 604-10.50, Bridge deck repair, (partial depth of slab) S.Y. If deteriorated concrete is encountered which appears to run full depth of slab, the Engineer may designate these areas to be repaired under Item No. 604-10.30, Brige deck repair, (full depth of slab), S.Y. Power driven hand tools used for removal of unsound concrete in making partial depth repairs are subject to the following restrictions: 1) Pneumatic Hammers heavier than 35 pound class shall not be used. 2) Chipping hammers of the 15 pound class shall be used to remove concrete from beneath any reinforcing steel, and within 1" of top of box beam.

⑤ The Contractor is advised to use extreme care during any attempted full-depth removal, to avoid damaging existing box beam surfaces. Max. depth of box slab chipping shall not exceed ½ inch.

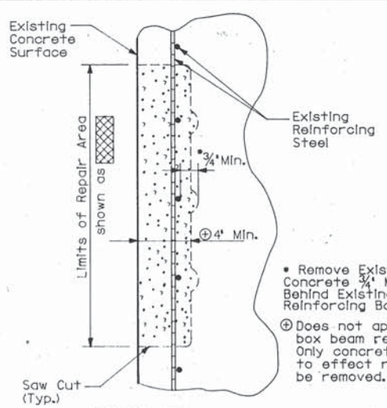

* Remove Existing Concrete 3/4" Min. Behind Existing Reinforcing Bar.

⊕ Does not apply to box beam repair. Only concrete necessary to effect repair shall be removed.

DETAIL "Y"

DETAIL SHOWING EXISTING CONCRETE SURFACE TO BE REPAIRED

NOTES FOR DETAIL Y:

Care shall be taken when removing existing deteriorated concrete in designated repair areas so as not to damage the existing reinforcing steel. All existing reinforcing steel shall be blast cleaned to remove all rust before pouring new concrete.

Concrete for the repaired areas shall be high early strength, f'c = 3,000 p.s.i.; Type III cement shall be used in lieu of Type I cement. ~~No traffic or other loading will be allowed on the repaired areas until 10 calender days have elapsed and representative test specimens have attained a compressive strength of not less than 3,000 p.s.i.~~ ⚠

Cost of removing deteriorated concrete, all blast cleaning, forming, high early strength concrete, labor and all additional materials necessary to complete the repairs as shown in detail shall be included under Item No. 604-10.42, Concrete Repairs, C.F..

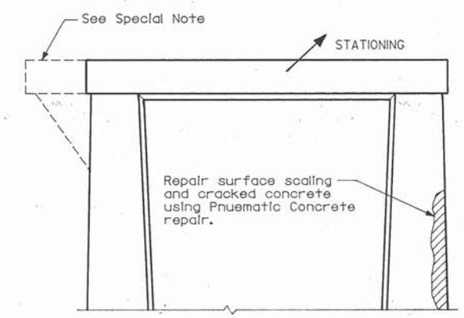

W.B.L. PIER 1 REPAIR

(Looking in Direction of Stationing)

W.B.L. SPAN D BEAM SURFACE REPAIR

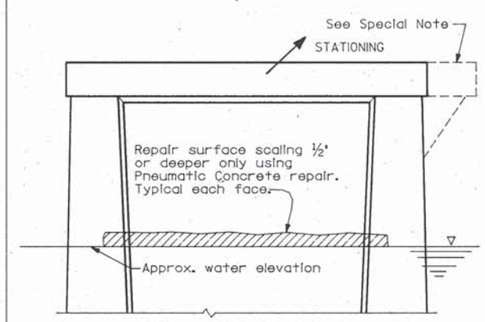

E.B.L. PIER 3 REPAIR

(Looking in Direction of Stationing)

STATE OF TENNESSEE
DEPARTMENT OF TRANSPORTATION
BUREAU OF HIGHWAYS

REPAIR DETAILS
I-40 OVER
CANEY FORK RIVER
STA. 518+49.00 ℄ SURVEY
E.B. & W.B. I-40
SMITH COUNTY
1989

CORRECT _____ ENGINEER OF STRUCTURES

APPROVED _____ DIRECTOR OF HIGHWAYS

M-214-156

DESIGNED BY	WSH	DATE	1/89
DRAWN BY	TLK	DATE	1/89
SUPERVISED BY	WSH	DATE	1/89
CHECKED BY	WSH	DATE	3/89

ZFILE:B240TN0XX703.DGN1 DTN0XX 9-MAR-1989 09:07

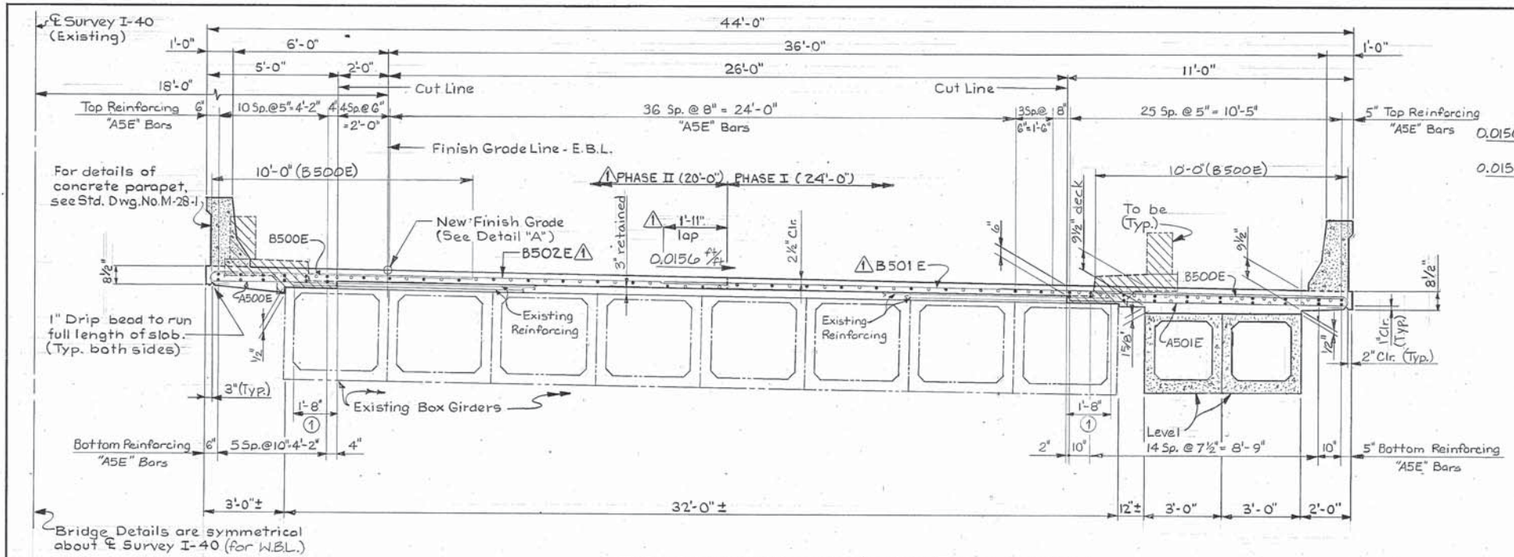

TYPICAL SECTION - E.B.L. (Looking Forward on Survey)
(W.B.L. opposite hand)
Scale: ⅜" = 1'-0"

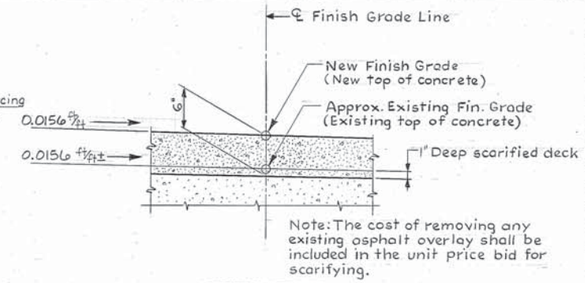

DETAIL "A"
No Scale

Const. No. 80001-3152-44

PROJECT NO.	YEAR	SHEET NO.
IR-40-5(91)257	1989	

REVISIONS

NO.	DATE	BY	BRIEF DESCRIPTION
1	9/29/89	DWT	REVISIONS FOR CONSTR. JT.

Note:
• - Continuous longitudinal reinforcement.
o - Non-Continuous longitudinal reinforcement.

(1) Retain 1'-8" extension of transverse existing deck reinforcing into new concrete. Any existing deck bar which cannot be preserved shall be replace at the same location by drilling and grouting a 2'-8" length #4 dowel bar, embedded 12" in existing concrete, at no additional cost to the Department. Do not use precast deck panels.

1 See Drw. No. M-214-59A for Construction Joint and phase Construction Details.

Notes:
When pouring wingwalls, provisions shall be made for setting reinforcing steel for wingpost and parapet. For details of wingpost and parapet, see Std. Dwg. No. M-28-1.
When pouring deck, provisions shall be made for setting reinforcing steel for parapet. The parapet shall not be poured until the slab is poured and cured.

~~Immediately before substructure riser blocks are poured, the Contractor shall measure the actual camber of the fabricated prestressed beams and submit these measurements to the Engineer. The anticipated values for the mid-point of the beams at erection, including vertical curve correction, are as follows:~~
~~SPANS A & D - 2 15/16"~~
~~SPANS B & C - 5¼"~~ Note: A positive value indicates an upward camber.
~~If the measured camber exceeds these anticipated values by 1" or more, corrective measures such as changes in riser block elevations and/or roadway grade must be developed by the Contractor and submitted to the Engineer for approval before any riser blocks are poured.~~

Top part of abutments shall be poured concurrently with deck slab and included in the quantity for item 604-01.02 given on abutment sheets.

ESTIMATE QUANTITIES - E.B.L. or W.B.L.	
Class "A" Concrete (Bridge Deck) C.Y.	Epoxy Coated Reinforcing Steel Lb.
311	1 49168

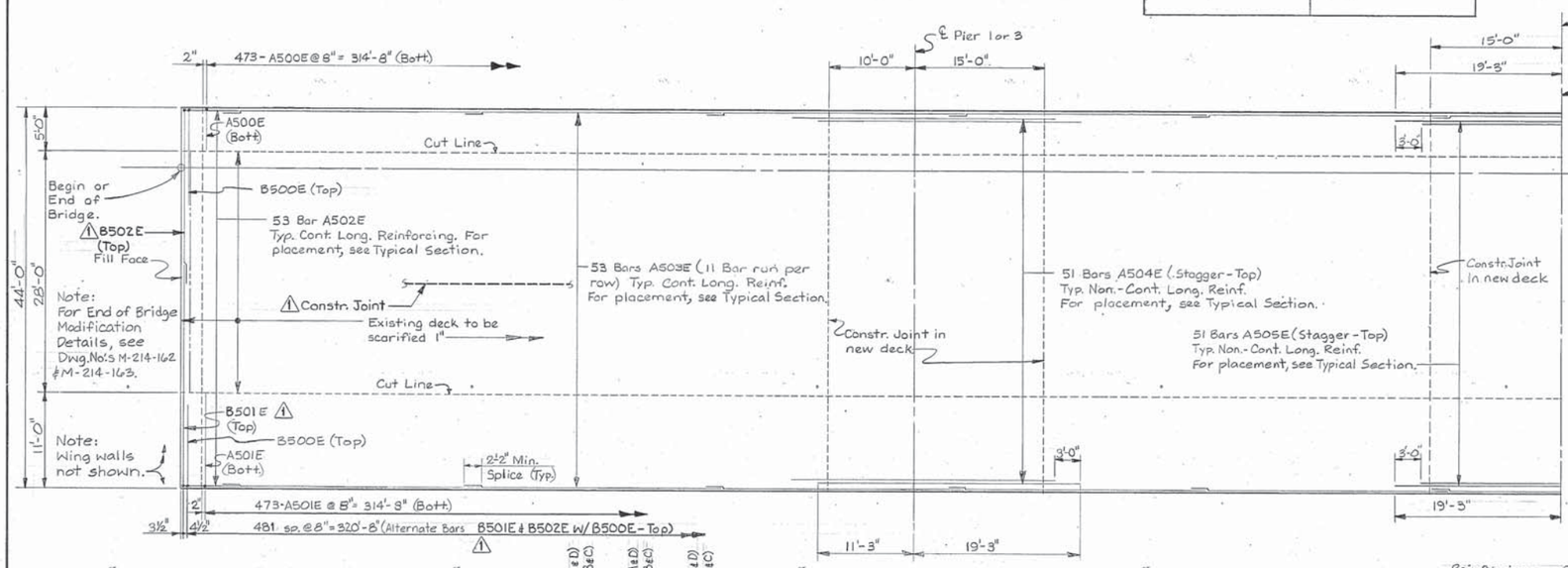

DECK PLAN - E.B.L.
(W.B.L. Similar)
No Scale

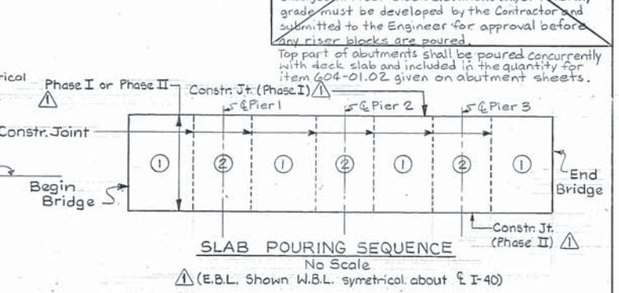

SLAB POURING SEQUENCE
No Scale
1 (E.B.L. Shown W.B.L. symetrical about ℄ I-40)

Note:
All pours are to be made in numerical sequence. Pour No. (1) in exterior spans shall proceed in a direction from midspan to the abutments. Pours with the same numerical designation may be made simultaneously. Also, Pours (1) & (2) may be made simultaneously provided the (1) sections are placed on each side of any (2) section placed during a particular pour.
No equipment shall be permitted on the bridge until all pours are made and the concrete is properly cured. All slab construction joints shall be in accordance with the Slab Construction Joint detail shown on this sheet.

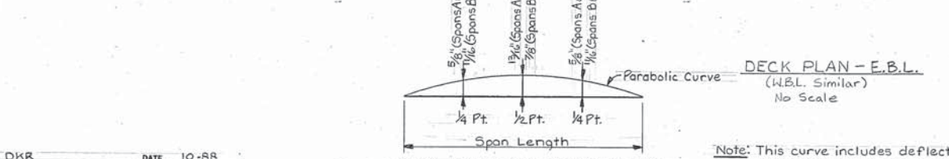

DEAD LOAD CORRECTION CURVE
EXISTING BEAMS

Note: This curve includes deflection of existing bridge under load of new deck overlay and new rails. Contractor shall use this information to make necessary screed adjustment.

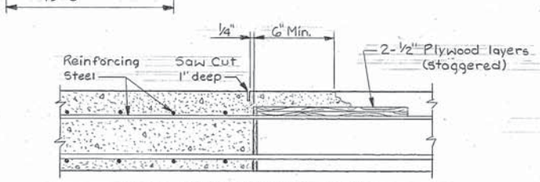

SLAB CONSTRUCTION JOINT
No Scale

STATE OF TENNESSEE
DEPARTMENT OF TRANSPORTATION
BUREAU OF HIGHWAYS

SUPERSTRUCTURE DETAILS
I-40 OVER
CANEY FORK RIVER
STA. 518+49.00 ℄ SURVEY E.B.L. & W.B.L. I-40
SMITH COUNTY
1989

DESIGNED BY	DKR	DATE	10-88
DRAWN BY	HJK	DATE	10-88
SUPERVISED BY	WSH	DATE	10-88
CHECKED BY	DKR	DATE	2-89

CORRECT _____ ENGINEER OF STRUCTURES
APPROVED _____ DIRECTOR OF HIGHWAYS

M-214-159

U.S.A. No. DTN0XX702B

ZFILE(S)R,2-42DTN0XX702.DGN(1)
DTN0XX
4-FEB-1989 07:12

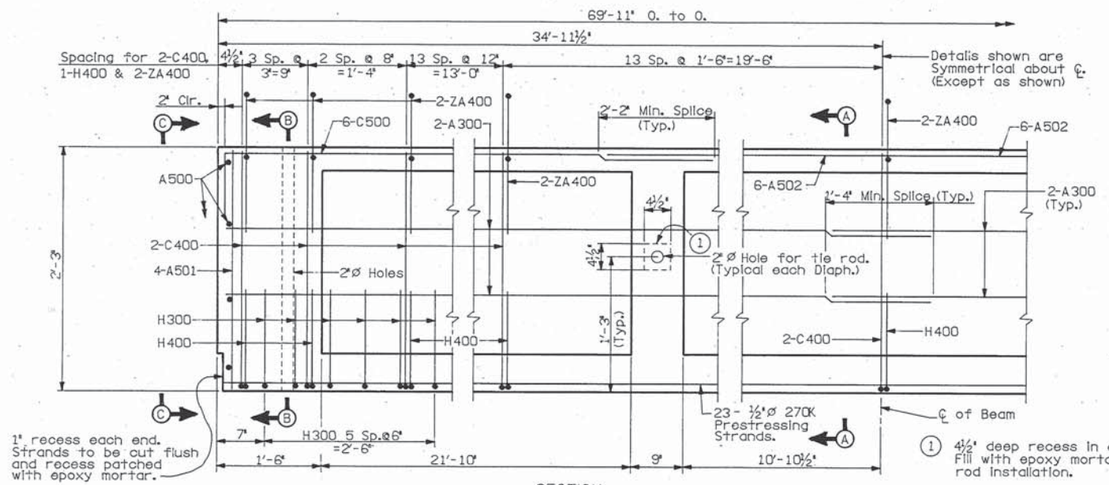

SECTION
No Scale

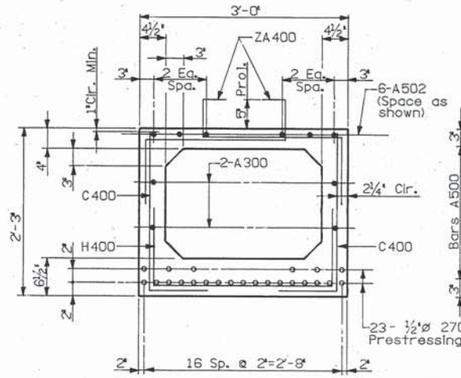

SECTION A-A
Scale: 1"=1'-0"

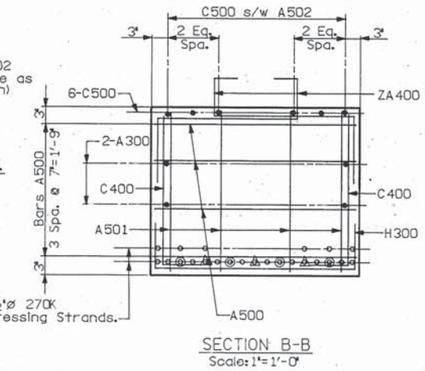

SECTION B-B
Scale: 1"=1'-0"

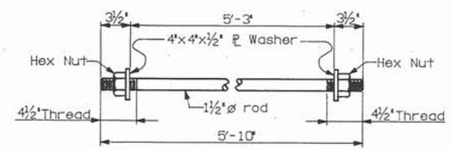

TIE ROD DETAIL

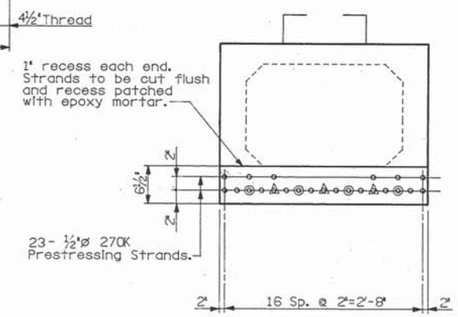

ELEVATION C-C
Scale: 1"=1'-0"

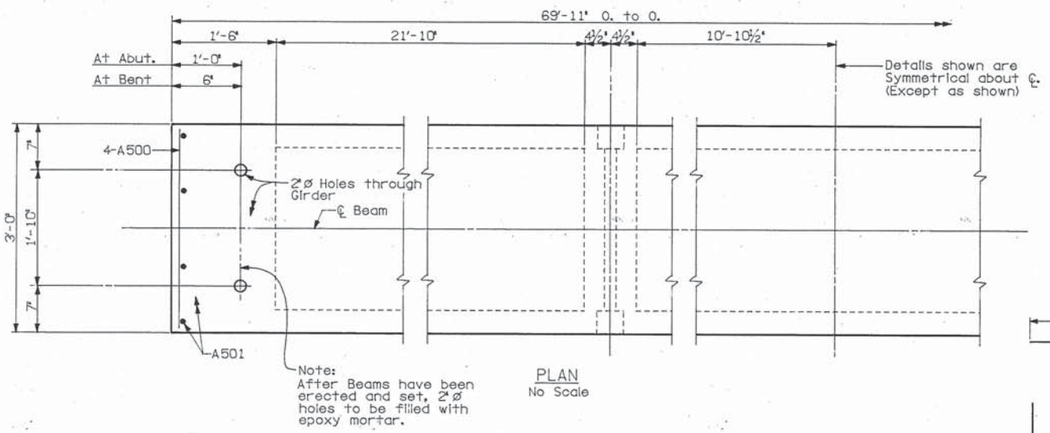

PLAN
No Scale

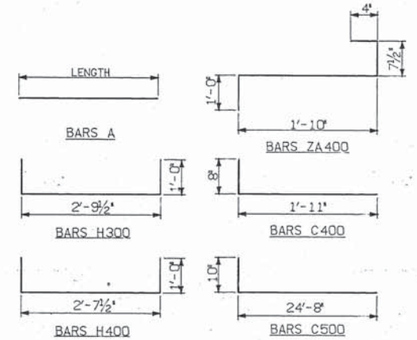

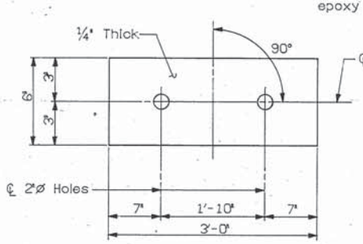

AT ABUTMENTS
(4 Req'd)

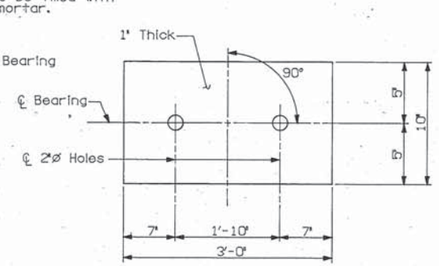

AT PIERS
(4 Req'd)

60 DURO.

DETAILS OF ELASTOMERIC BEARING PADS
No Scale

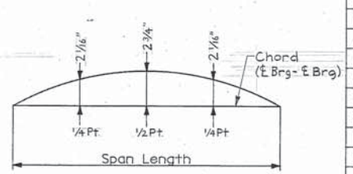

DEAD LOAD CORRECTION CURVE
(For use in field) △1

BILL OF STEEL - ONE BEAM

		SPAN A		SPAN D			
BARS	SIZE	NO. REQ'D	LENGTH	NO. REQ'D	LENGTH		
A300	3	8	35'-6"	8	35'-6"		
A500	5	8	2'-8"	8	2'-8"		
A501	5	8	1'-11"	8	1'-11"		
A502	5	6	24'-8"	6	24'-8"		
C400	4	128	2'-7"	128	2'-7"		
C500	5	12	25'-6"	12	25'-6"		
H300	3	12	4'-10"	12	4'-10"		
H400	4	64	4'-8"	64	4'-8"		
ZA400	4	128	3'-10"	128	3'-10"		

ESTIMATED QUANTITIES - ONE BEAM

ITEM	UNIT	SPAN A	SPAN D	
CLASS "A" CONCRETE	C.Y.	10.3	10.3	
REINFORCING STEEL	LB.	1,390	1,390	
PRESTRESSING STRANDS	LB.	842	842	

CONSTR. NO. 80001-3152-44

PROJECT NO.	YEAR	SHEET NO.
IR-40-5(91)257	1989	

REVISIONS

NO.	DATE	BY	BRIEF DESCRIPTION
△1	9/29/89	DWT	Revised Dead Load Correction Values

PRESTRESSED BEAM NOTES

The top of all beams are to be rough floated. At approximately the time of initial set, the top of the beams will also be scrubbed transversely with a course wire brush to remove all laitance and produce a rough surface. Where precast slab panels are to be used and set on bituminous fiberboard, the outer two inches of the top flange may be troweled.

Anchorage at the expansion end of beams accomplished by dowels 1"ø x 1'-6". Fixed end dowels to be 1"ø x 1'-6".

Mild steel reinforcing shall be ASTM A615 Grade 60.

All prestressing strands to be 1/2"ø ASTM Grade 270K, 7 wire uncoated Low relaxation prestressing strands.

An initial force at anchorage (after seating) of 31,000 Lbs., shall be applied to each strand in all beams.

1" recess shall be formed at each end of Beam and fill with epoxy mortar as shown. The prestressing strands shall be cut off flush with base of recess.

The concrete for this construction shall be of such properties as to attain a compressive strength of not less than (5,000 PSI) at the age of 28 days and stress transfer shall not be made to the bridge member until the test specimens indicate that the concrete has reached a compressive strength of at least (4,000 PSI). See General Notes for Concrete finishing note.

1"ø weep holes shall be provided at the low point of each cell. Vent holes shall be provided in the top of each cell during fabrication to relieve gas pressures that occur during curing. The vent holes shall be plugged after curing is completed.

NOTE: Cost of elastomeric pads, tie rods, dowels and rubber bonding cement to be included in the cost of prestressed beam.

The sequence for transfer of stress or the cutting strands shall be in accordance with Article 615.14 of the "Standard Specifications for Road and Bridge Construction" and shall be shown on the approved shop drawings. At no time shall more than 1/6th of the total prestressing force be eccentric about the centerline of the beam.

DEAD LOAD CORRECTION CURVE: This curve is for dead load slab and all dead loads that are applied after slab is in place and should be corrected to compensate for the effects due to vertical curve.

Note:
△ - Denotes De-bonded Strand 10'-0" from each end.
◎ - Denotes De-bonded Strand 3'-0" from each end.
∘ - Denotes Prestressing strand.
• - Denotes Grade 60 Reinf. Steel.

STATE OF TENNESSEE
DEPARTMENT OF TRANSPORTATION
BUREAU OF HIGHWAYS

PRESTRESSED BOX BEAM DETAILS
SPANS A & D (E.B.L. & W.B.L.)
I-40 OVER CANEY FORK RIVER
STA. 518+49.00 ℄ SURVEY E.B & W.B. I-40
SMITH COUNTY
1989

DESIGNED BY	HIZ	DATE	11-88
DRAWN BY	EAB	DATE	11-88
SUPERVISED BY	WSH	DATE	11-88
CHECKED BY	HIZ	DATE	1-89

CORRECT _____ ENGINEER OF STRUCTURES

APPROVED _____ DIRECTOR OF HIGHWAYS

M-214-160

U.S.A. No. DTNOXX702A

ZFH50.243DTNOXX702.DGN
DTNOXX
9-FEB-1989 09:44

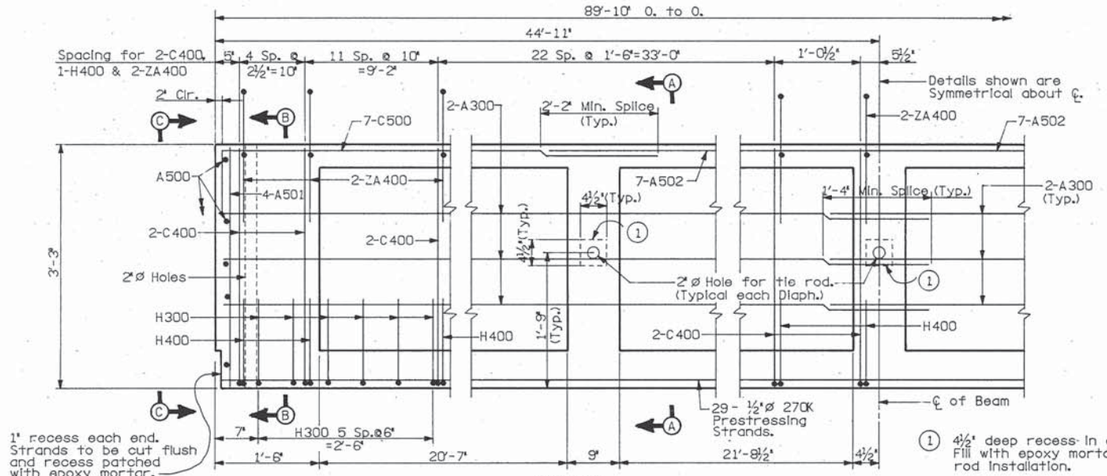

SECTION
Scale: 1"=1'-0"

① 4½" deep recess in exposed face. Fill with epoxy mortar after tie rod installation.

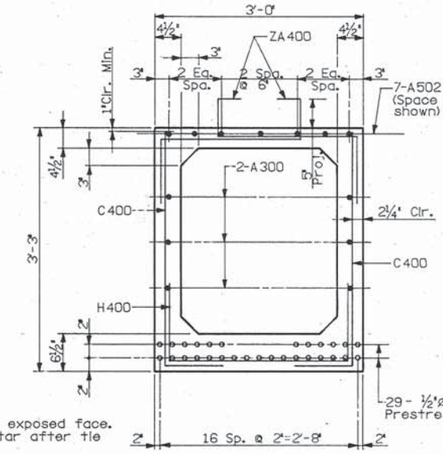

SECTION A-A
Scale: 1"=1'-0"

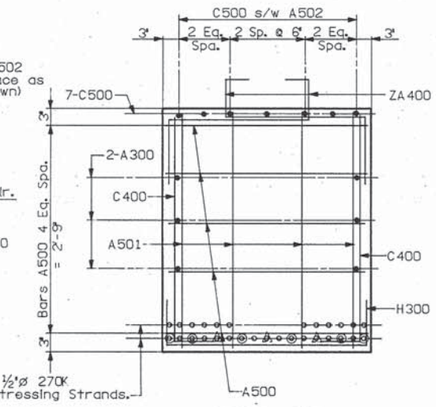

SECTION B-B
Scale: 1"=1'-0"

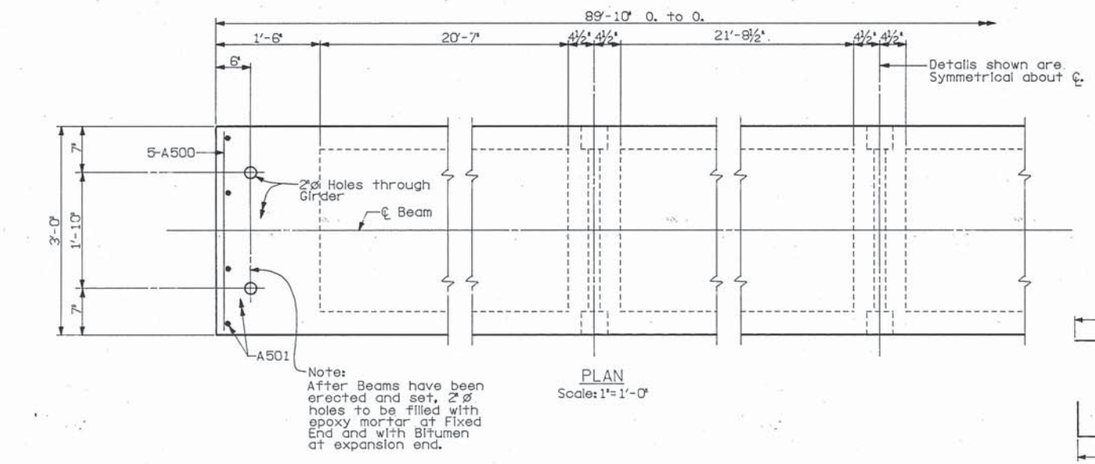

PLAN
Scale: 1"=1'-0"

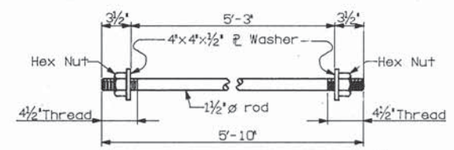

TIE ROD DETAIL

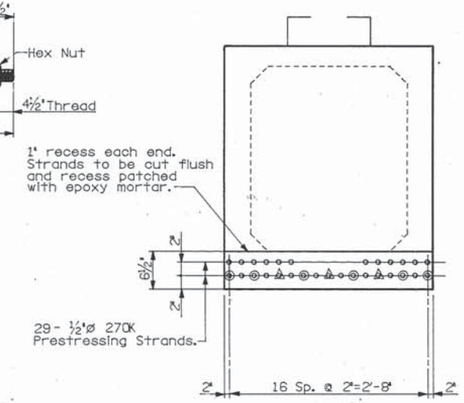

ELEVATION C-C
Scale: 1"=1'-0"

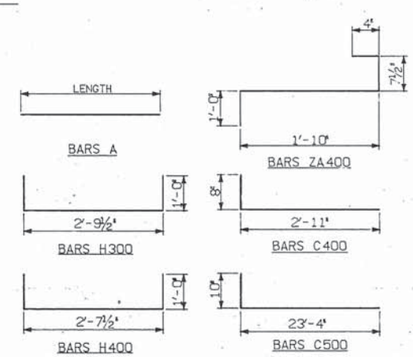

Note:
▲ - Denotes De-bonded Strand 15'-0" from each end.
◉ - Denotes De-bonded Strand 6'-0" from each end.
∘ - Denotes Prestressing strand.
• - Denotes Grade 60 Reinf. Steel.

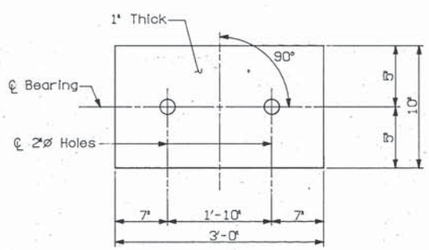

AT PIERS
(8 Req'd)

60 DURO.

DETAILS OF ELASTOMERIC BEARING PADS
No Scale

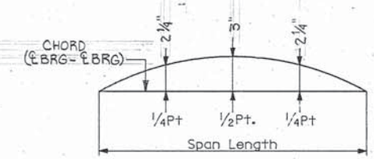

DEAD LOAD CORRECTIONS CURVE
(For Use In Field) △1

BILL OF STEEL - ONE BEAM

		SPAN B		SPAN C			
BARS	SIZE	NO. REQ'D	LENGTH	NO. REQ'D	LENGTH		
A300	3	12	45'-5"	12	45'-5"		
A500	5	10	2'-8"	10	2'-8"		
A501	5	8	2'-11"	8	2'-11"		
A502	5	14	24'-8"	14	24'-8"		
C400	4	156	3'-7"	156	3'-7"		
C500	5	14	24'-2"	14	24'-2"		
H300	3	12	4'-10"	12	4'-10"		
H400	4	78	4'-8"	78	4'-8"		
ZA400	4	156	3'-10"	156	3'-10"		

ESTIMATED QUANTITIES - ONE BEAM

ITEM	UNIT	SPAN B	SPAN C	
CLASS "A" CONCRETE	C.Y.	16.4	16.4	
REINFORCING STEEL	LB.	1,991	1,991	
PRESTRESSING STRANDS	LB.	1,365	1,365	

CONSTR. NO. 80001-3152-44

PROJECT NO.	YEAR	SHEET NO.
IR-40-5(91)257	1989	

REVISIONS

NO.	DATE	BY	BRIEF DESCRIPTION
1	9/25/89	DWT	Dead Load Correction Values Revised

PRESTRESSED BEAM NOTES

The top of all beams are to be rough floated. At approximately the time of initial set, the top of the beams will also be scrubbed transversely with a course wire brush to remove all laitance and produce a rough surface. Where precast slab panels are to be used and set on bituminous fiberboard, the outer two inches of the top flange may be troweled.

Anchorage at the expansion end of beams accomplished by dowels 1"ø x 1'-6". Fixed end dowels to be 1"ø x 1'-6".

Mild steel reinforcing shall be ASTM A615 Grade 60.

All prestressing strands to be 1/2"ø ASTM Grade 270K, 7 wire uncoated Low relaxation prestressing strands.

An inital force at anchorage (after seating) of 31,000 Lbs., shall be applied to each strand in all beams.

1" recess shall be formed at each end of Beam and fill with epoxy mortar as shown. The prestressing strands shall be cut off flush with base of recess.

The concrete for this construction shall be of such properties as to attain a compressive strength of not less than (5,000 PSI) at the age of 28 days and stress transfer shall not be made to the bridge member until the test specimens indicate that the concrete has reached a compressive strength of at least (4,000 PSI). See General Notes for Concrete finishing note.

1"ø weep holes shall be provided at the low point of each cell. Vent holes shall be provided in the top of each cell during fabrication to relieve gas pressures that occur during curing. The vent holes shall be plugged after curing is completed.

NOTE: Cost of elastomeric pads, tie rods, dowels and rubber bonding cement to be included in the cost of prestressed beam.

The sequence for transfer of stress or the cutting strands shall be in accordance with Article 615.14 of the "Standard Specifications for Road and Bridge Construction" and shall be shown on the approved shop drawings. At no time shall more than 1/6th of the total prestressing force be eccentric about the centerline of the beam.

DEAD LOAD CORRECTION CURVE: This curve is for dead load slab and all dead loads that are applied after slab is in place and should be corrected to compensate for the effects due to vertical curve.

STATE OF TENNESSEE
DEPARTMENT OF TRANSPORTATION
BUREAU OF HIGHWAYS

PRESTRESSED BOX BEAM DETAILS
SPANS B & C (E.B.L. & W.B.L.)
I-40 OVER CANEY FORK RIVER
STA. 518+49.00 ℄ SURVEY E.B & W.B. I-40
SMITH COUNTY
1989

DESIGNED BY	HIZ	DATE	11-88
DRAWN BY	EAB	DATE	11-88
SUPERVISED BY	WSH	DATE	11-88
CHECKED BY	HIZ	DATE	1-89

CORRECT _____ ENGINEER OF STRUCTURES
APPROVED _____ DIRECTOR OF HIGHWAYS

M-214-161

Notes: All surfaces of the existing abutment against which new concrete is to be placed shall be cleaned and intentionally roughened. All materials removed becomes the property of the Contractor and shall be disposed of by him.
All costs associated with the demolition and disposal and surface preparation required shall be included in the price bid for item No. 202-04.06

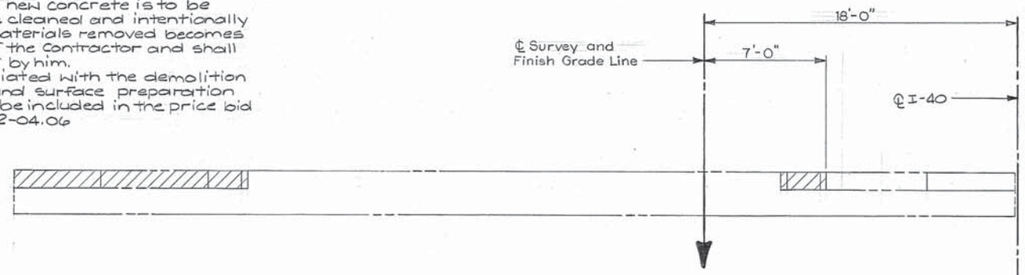

PLAN-EXISTING ABUTMENT 1 EBL
No Scale
(Abutment 1 WBL Symmetrical about ℄ I-40)

DEMOLITION DETAILS

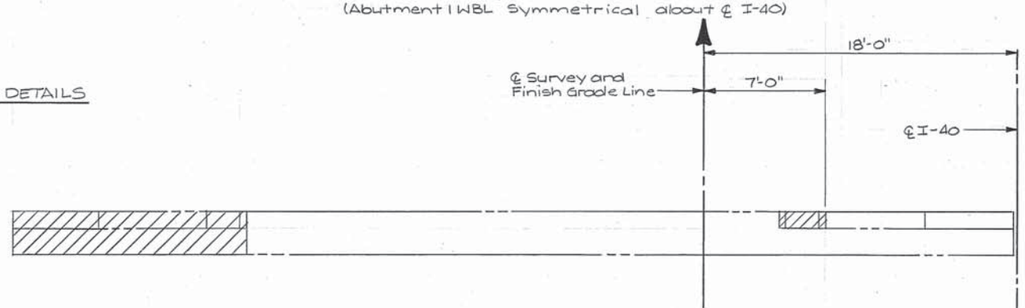

PLAN-EXISTING ABUTMENT 2 WBL
No Scale
(Abutment 2 EBL Symmetrical about ℄ I-40)

Reinforcing steel in this area shall be removed. For Abutment 1 only it shall be removed to a depth of 2" below the top of footing and then the footing shall be patched with grout.

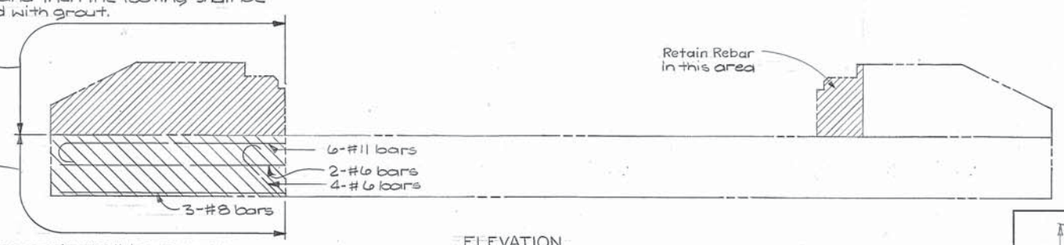

The concrete shall be removed in this area for Abutment 2 only. All reinforcing steel shall be removed except the bars shown. These bars shall be field cut to leave an 8'-8" projection.

ELEVATION
No Scale
(Abutment 1 E.B.L. looking back on Stationing or Abutment 2 W.B.L. looking in direction of Stationing)

ESTIMATED QUANTITIES ⚠				
ITEM	CONCRETE f'c=4500 psi CY	CONCRETE f'c=3000 psi CY	REINFORCING STEEL LBS	EPOXY COATED REINFORCING STEEL (LBS)
ABUTMENT 1 EBL	14	9	2342	1654
ABUTMENT 2 EBL	11	7	5176	2254
ABUTMENT 1 WBL	14	9	2342	1654
ABUTMENT 2 WBL	11	7	5176	2254

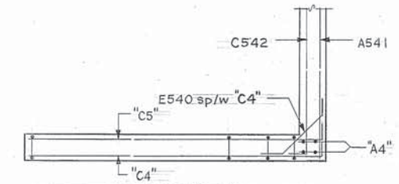

SECTION "A-A"
No Scale

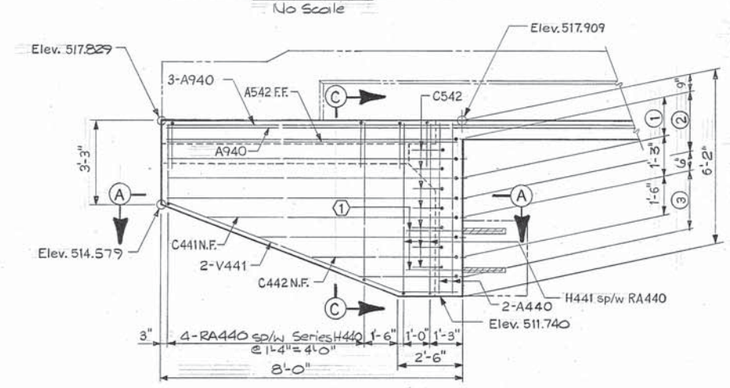

ELEVATION-WINGWALL 1
No Scale

⑤ At Wingwall 1 (EBL & WBL) reduce 1'-9" dimension to 1'-0" in vicinity of bridge end drain only. Form at constant 1'-0" for full height at these locations. Omit Bars "RA4" and field cut Bars "A9" and A545 at drains. Adjust placement of remaining reinforcing to fit while maintaining clearances. See Std. Dwg D-BE-3 for limits of bridge end drain.

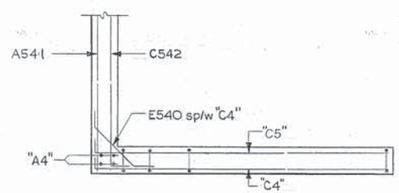

SECTION "B-B"
No Scale

① - Do not field bend doweled "A5" bars at Wing location

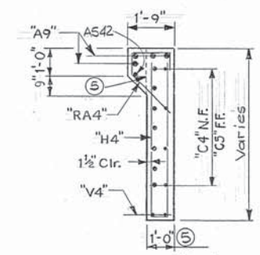

SECTION "C-C"
No Scale

① - 2-C440 @ 18" N.F.
② - 4-C544 @ 9" = 2'-3" F.F.
③ - Series C541 @ 9" = 2'-3" F.F.
④ - Series C543 @ 9" = 3'-0" F.F.

N.F. - Near Face
F.F. - Far Face

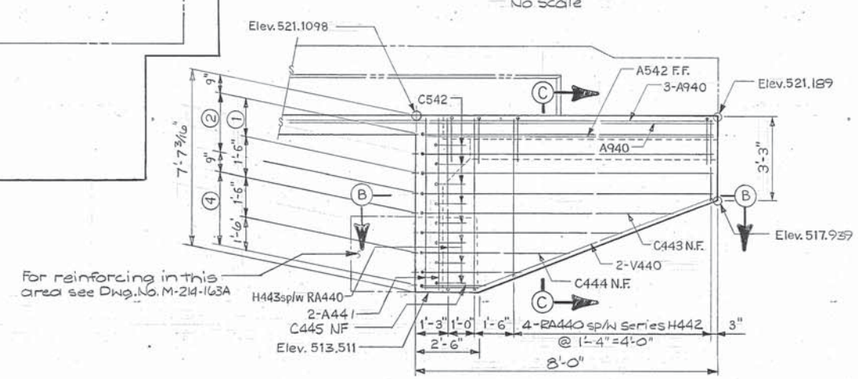

ELEVATION-WINGWALL 2
No Scale

CONSTR. NO. 80001-3152-44

PROJECT NO.	YEAR	SHEET NO.
IR-40-5(91)257	1989	

REVISIONS

NO.	DATE	BY	BRIEF DESCRIPTION
1	9/25/89	DWT	Quantities Revised

STATE OF TENNESSEE
DEPARTMENT OF TRANSPORTATION
BUREAU OF HIGHWAYS

ABUTMENT DETAILS (1)
I-40 OVER CANEY FORK RIVER
STA. 518+49 ℄ SURVEY E.B. & W.B. I-40
SMITH COUNTY
1989

DESIGNED BY DWT DATE 1-89
DRAWN BY SFC DATE 1-89
SUPERVISED BY WSH DATE 1-89
CHECKED BY DWT DATE 2-89

CORRECT _____ ENGINEER OF STRUCTURES
APPROVED _____ DIRECTOR OF HIGHWAYS

M-214-162

CONSTR. NO. 80001-3152-44

PROJECT NO.	YEAR	SHEET NO.
IR-40-5(91)257	1989	

REVISIONS

NO.	DATE	BY	BRIEF DESCRIPTION
1	5/29/89	DWT	Revised for Constr. Jt.

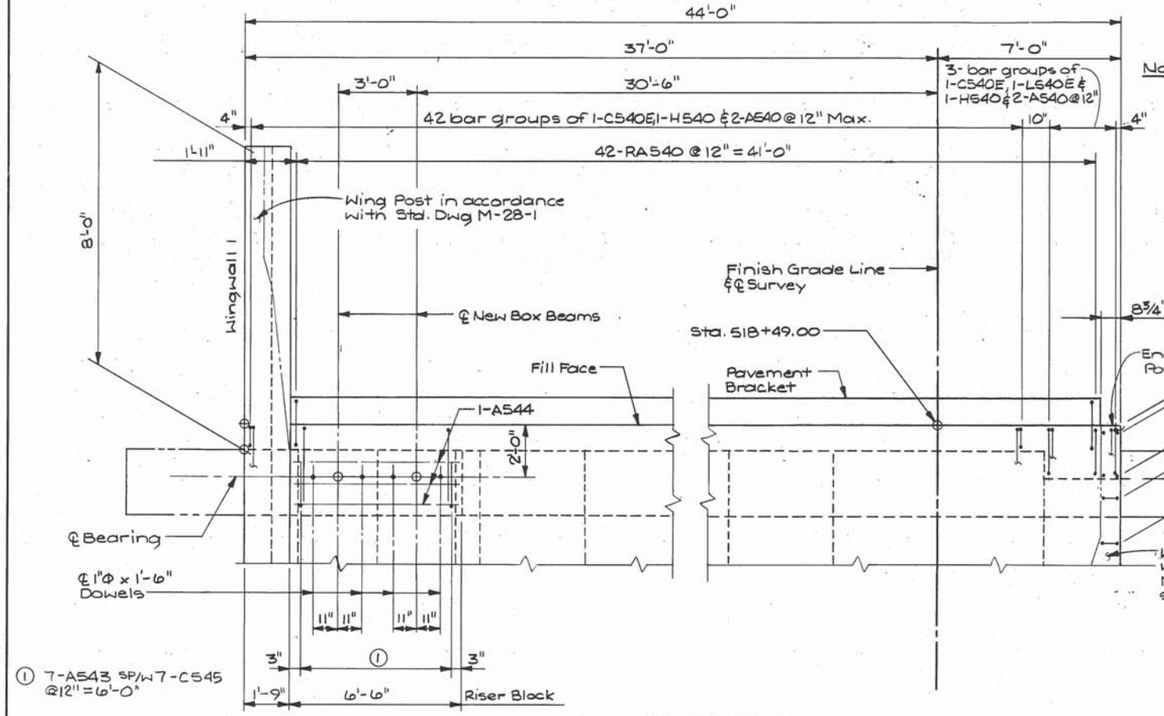

PLAN-ABUTMENT 1 EBL
No Scale
(Abutment 1 (WBL) symmetrical about ℄ I-40)

Notes: Revised Wing Post

Wing Post in accordance with Std. Dwg M-28-1 except as noted below.

② 6-Bars H530E @ 4½" = 1'-10½"

③ 5-Bars A700E @ 4½" = 1'-6" EF

Delete 12-A700E and Substitute 6-H530E, and re-space remaining bars as shown. Revise 1'-4" dimension on GA500E to 1'-0½"

All cost associated with shown revision to M-28-1 shall be included in the price bid for item #620-03 (Including bars H530E)

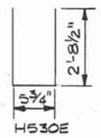

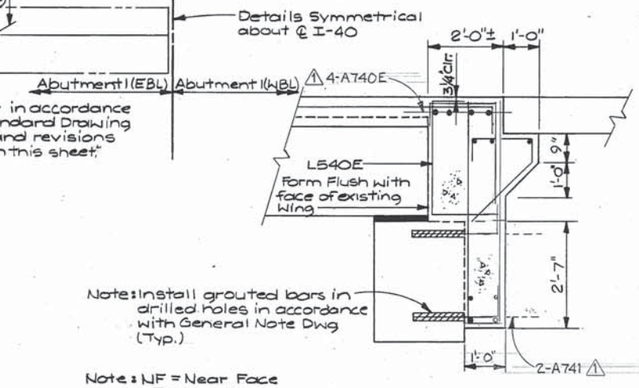

Note: NF = Near Face
FF = Far Face
EF = Each Face

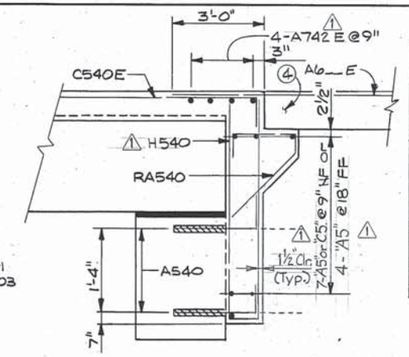

SECTION B-B
No Scale

Note: This section shall not be poured until the beams are in place. Also, this section shall be poured concurrently with the end of the slab.

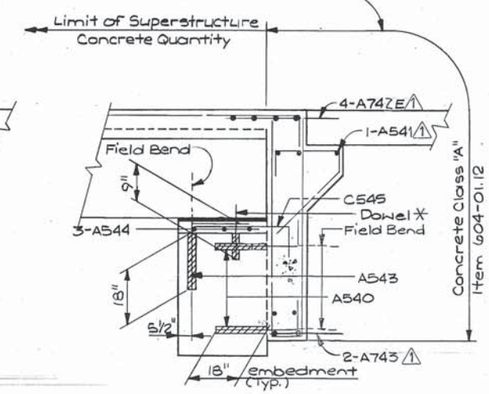

SECTION A-A
No Scale

SECTION C-C
No Scale

④ Approach pavement in accordance with Std. Drawing K-86-144 except delete Bars F9__ and A6__ shown on K-86-144 and substitute Bars A6__E (6'-0" long) as shown @ 12" spacing. (41 req'd per approach slab) All costs associated with revision shown shall be included in the price bid for Item No. 604-03.04

✳ Drill and grout into existing abutment as necessary to satisfy embedment requirements.

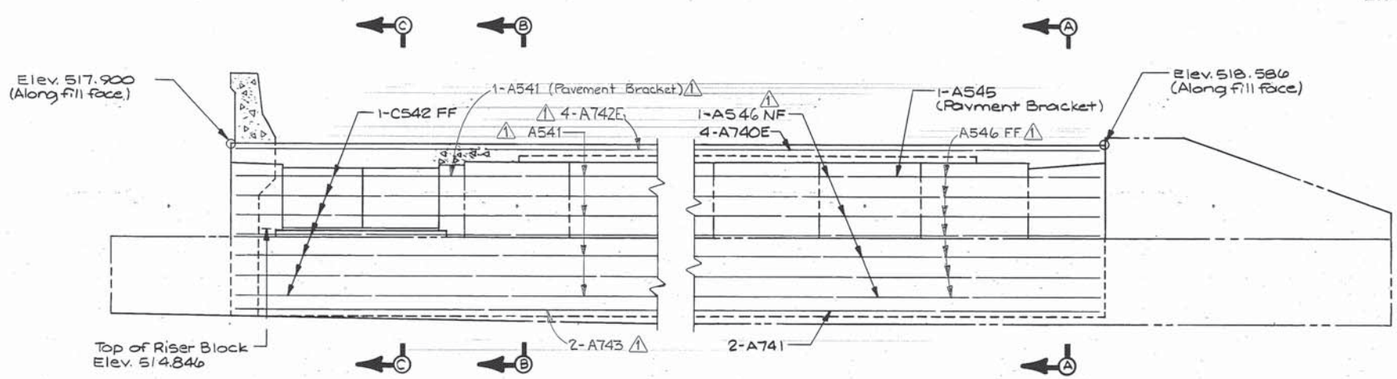

ELEVATION
No Scale
(Looking back on stationing)

Note: When pouring riser block provisions shall be made for setting dowels. All costs associated with furnishing and installing dowels shall be included in the price bid for prestressed beams. Cost of bridge rail and post is to be included in the cost of bridge rail system. All costs associated with field bending reinforcing steel shall be included in the price bid for Item No. 604-03.02

STATE OF TENNESSEE
DEPARTMENT OF TRANSPORTATION
BUREAU OF HIGHWAYS

ABUTMENT DETAILS (2)
I-40 OVER CANEY FORK RIVER
STA. 518+49 ℄ SURVEY EBL & WBL I-40
SMITH COUNTY
1989

DESIGNED BY	DWT	DATE	1-89
DRAWN BY	TEE	DATE	1-89
SUPERVISED BY	WSB	DATE	1-89
CHECKED BY	DWT	DATE	2-89

CORRECT _____ ENGINEER OF STRUCTURES

APPROVED _____ DIRECTOR OF HIGHWAYS

M-214-163

CONSTR. NO. 80001-3152-44

PROJECT NO.	YEAR	SHEET NO.
IR-40-5(91)257	1989	

REVISIONS

NO.	DATE	BY	BRIEF DESCRIPTION
1	9/7/89	DWT	Rebar designation corrected
2	9/29/89	DWT	Revised for Constr. Jt.

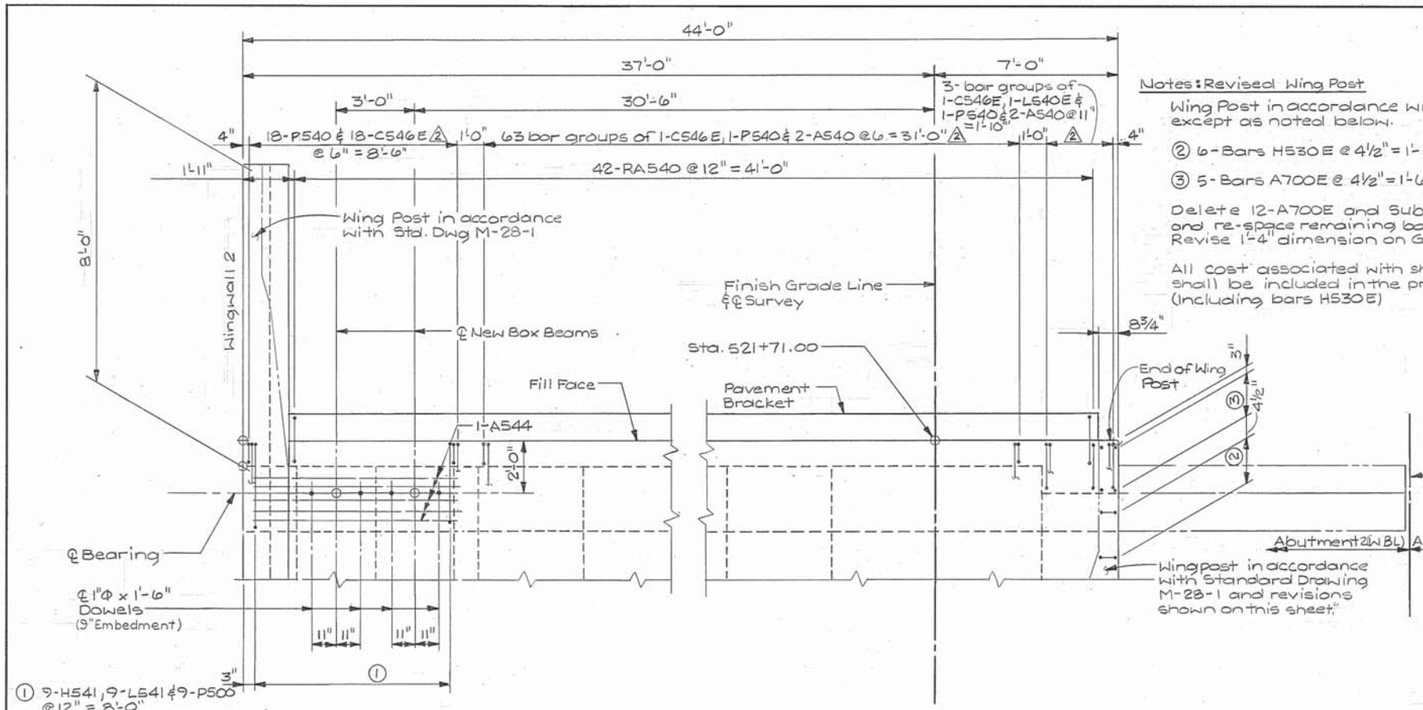

PLAN-ABUTMENT 2WBL
No Scale
(Abutment 2(EBL) symmetrical about ℄ I-40)

Notes: Revised Wing Post

Wing Post in accordance with Std. Dwg M-28-1 except as noted below.

② 6-Bars H530E @ 4½" = 1'-10½"

③ 5-Bars A700E @ 4½" = 1'-6" EF

Delete 12-A700E and Substitute 6-H530E. and re-space remaining bars as shown Revise 1'-4" dimension on GA500E to 1'-0½"

All cost associated with shown revision to M-28-1 shall be included in the price bid for item #620-03 (Including bars H530E)

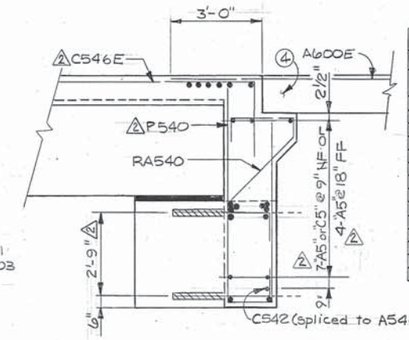

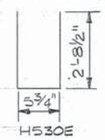

SECTION B-B
No Scale

Note: This section shall not be poured until the beams are in place. Also, this section shall be poured concurrently with the end of the slab.

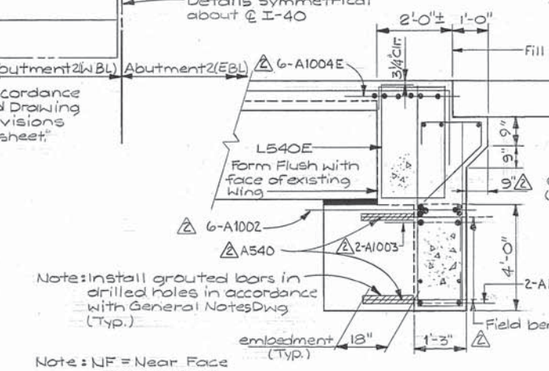

Note: NF = Near Face
FF = Far Face
EF = Each Face

SECTION A-A
No Scale

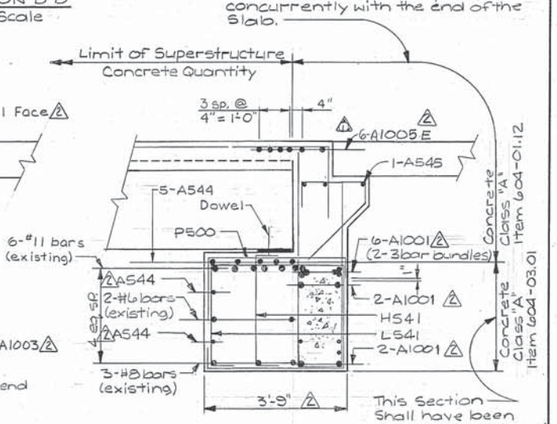

This Section shall have been poured and obtained full strength before any beam is set in place.

SECTION C-C
No Scale

④ Approach pavement in accordance with std. Drawing K-86-144 except delete Bars F9-- and A6-- shown on K-86-144 and substitute Bars A6--E (6'-0" long) as shown @ 12" spacing. (41 req'd per approach Slab) All costs associated with revision shown shall be included in the price bid for Item No. 604-03.04

Note:
For additional notes see Dwg. No. M-214-163.

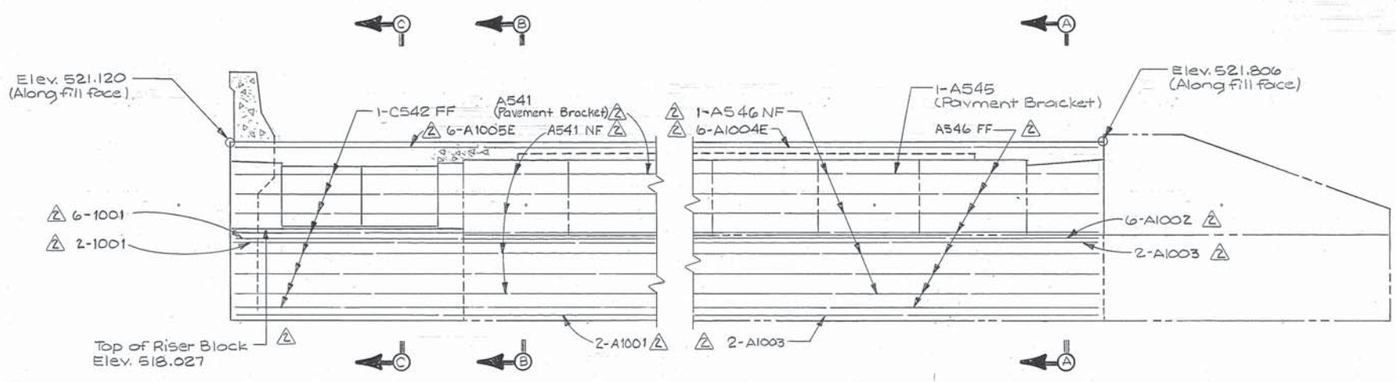

ELEVATION
No Scale
(Looking in direction of stationing)

STATE OF TENNESSEE
DEPARTMENT OF TRANSPORTATION
BUREAU OF HIGHWAYS

ABUTMENT DETAILS (3)
I-40 OVER CANEY FORK RIVER
STA. 518+49 ℄ SURVEY EBL & WBL I-40
SMITH COUNTY
1989

DESIGNED BY	DWT	DATE	1-89
DRAWN BY	TEE	DATE	1-89
SUPERVISED BY	WSH	DATE	1-89
CHECKED BY	DWT	DATE	2-89

CORRECT _____ ENGINEER OF STRUCTURES

APPROVED _____ DIRECTOR OF HIGHWAYS

M-214-163A

U.S.A. No. DTNOXX7068

Note:
See Detail 'G' for dowel layout.

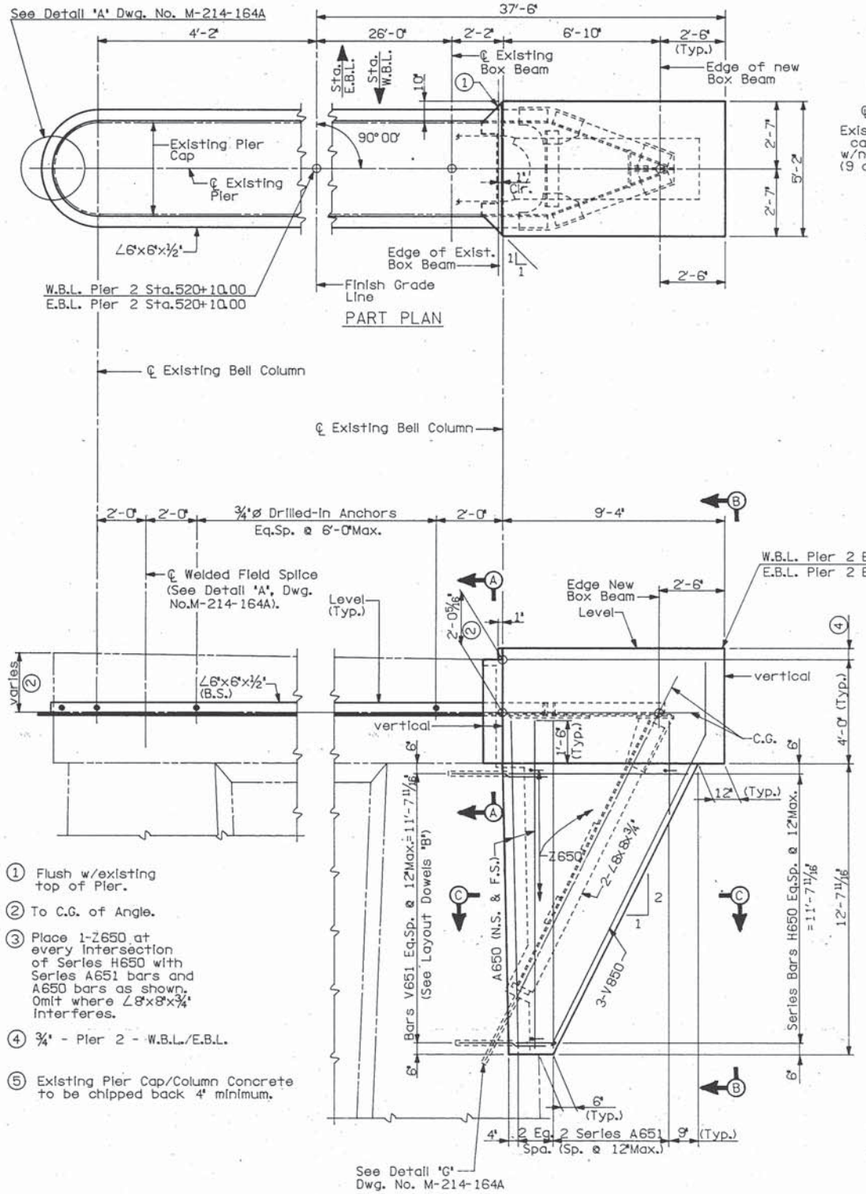

PART PLAN

PART ELEVATION
(Showing Cantilever Column Reinforcing)

① Flush w/existing top of Pier.

② To C.G. of Angle.

③ Place 1-Z650 at every intersection of Series H650 with Series A651 bars and A650 bars as shown. Omit where ∠8"x8"x¾" interferes.

④ ¾" - Pier 2 - W.B.L./E.B.L.

⑤ Existing Pier Cap/Column Concrete to be chipped back 4" minimum.

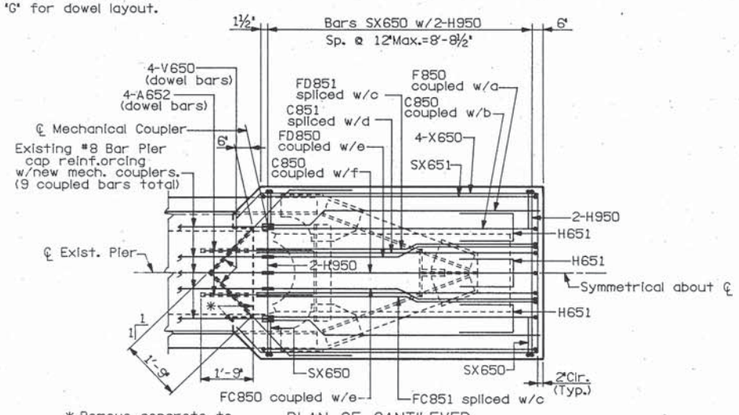

* Remove concrete to this line.

PLAN OF CANTILEVER CAP REINFORCING

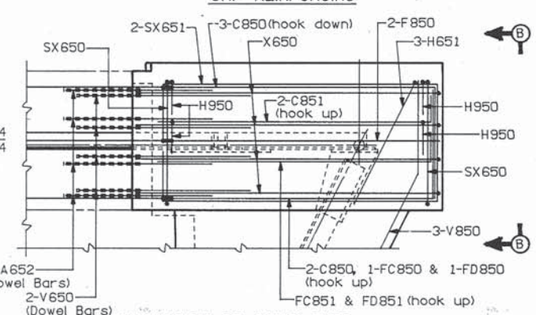

ELEVATION OF CANTILEVER CAP REINFORCING

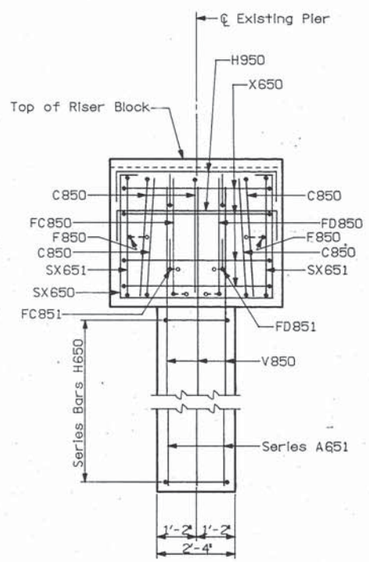

ELEVATION B-B

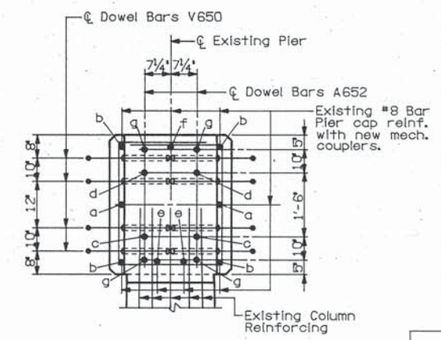

SECTION A-A

g - Denotes A652 dowel bars only.

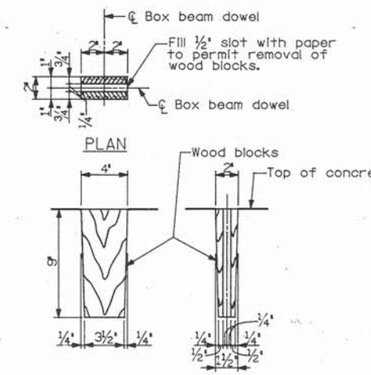

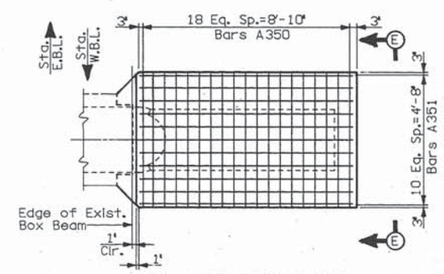

PLAN OF RISER BLOCK
PIER 2 W.B.L. & E.B.L.

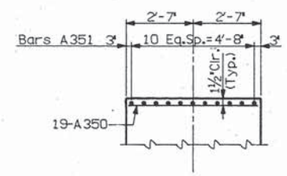

ELEVATION E-E

CONSTR. NO. 80001-3152-44

PROJECT NO.	YEAR	SHEET NO.
IR-40-5(91)257	1989	

REVISIONS

NO.	DATE	BY	BRIEF DESCRIPTION

Note:
For notes, see Dwg. No. M-214-164A.

ESTIMATED QUANTITIES

Item / Pier No.	Class 'A' Concrete (Bridges) C.Y.	Structural Steel Lb.	Steel Bar Reinforcement (Bridges) Lb.
W.B.L. - 2	13	3600	2583
E.B.L. - 2	13	3600	2583

Ⓐ Dowels 1"ø x 1'-6" embedded 9" in cap.

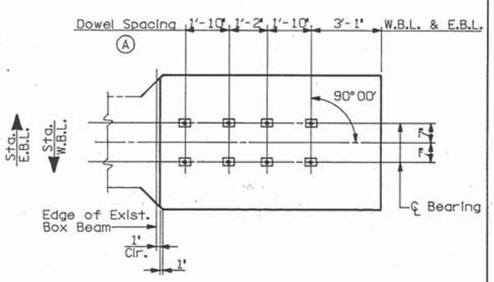

DETAIL 'G' DOWEL LAYOUT

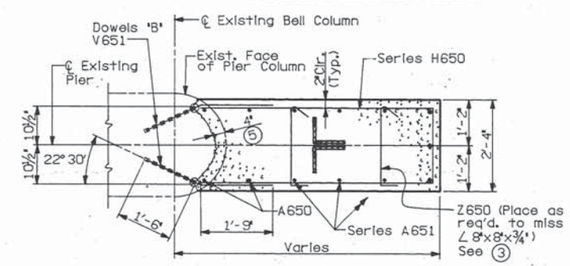

SECTION C-C
(Layout Dowels 'B')

STATE OF TENNESSEE
DEPARTMENT OF TRANSPORTATION
BUREAU OF HIGHWAYS

PIER 2
I-40 W.B.L. & E.B.L. OVER
CANEY FORK RIVER
STA. 518+49.00 ℄ SURVEY E.B. & W.B. I-40
SMITH COUNTY
1989

DESIGNED BY	WGA	DATE	2-89
DRAWN BY	EAB	DATE	2-89
SUPERVISED BY	WSH	DATE	2-89
CHECKED BY	WGA	DATE	3-89

CORRECT _____ ENGINEER OF STRUCTURES

APPROVED _____ DIRECTOR OF HIGHWAYS

Scale: None

M-214-164

U.S.A. No. DTN0XX706E

ZFHD8L24DTN0XX706.DGN
DTN0XX 11-MAR-1989 15:39

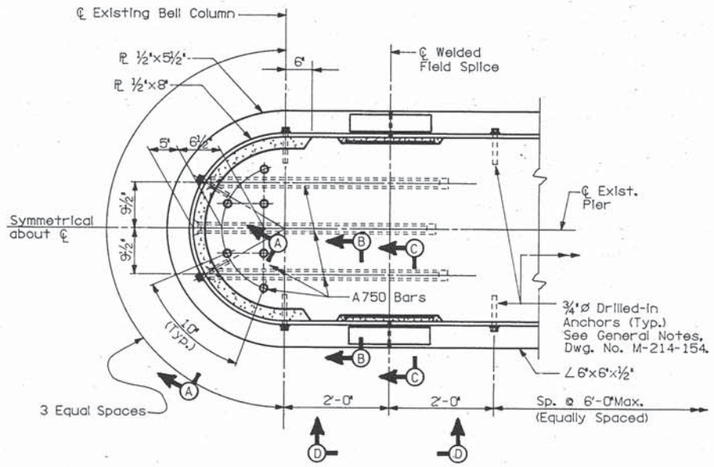

DETAIL "A"

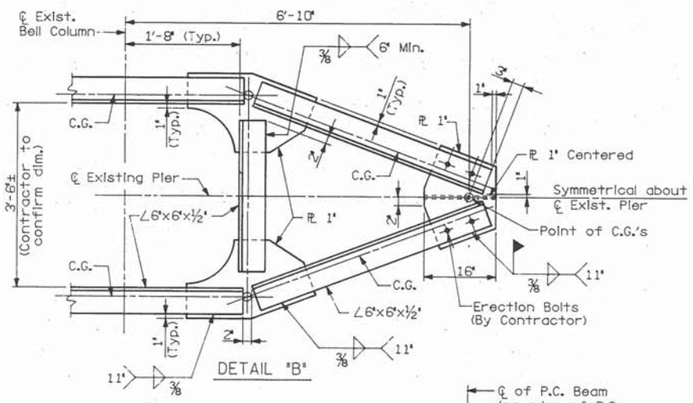

DETAIL "B"

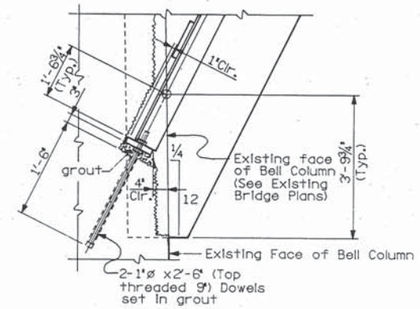

DETAIL "G"

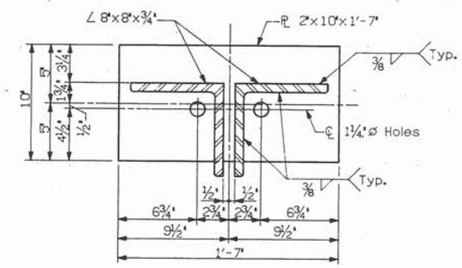

DETAIL "E"
PLAN OF BEARING PLATE

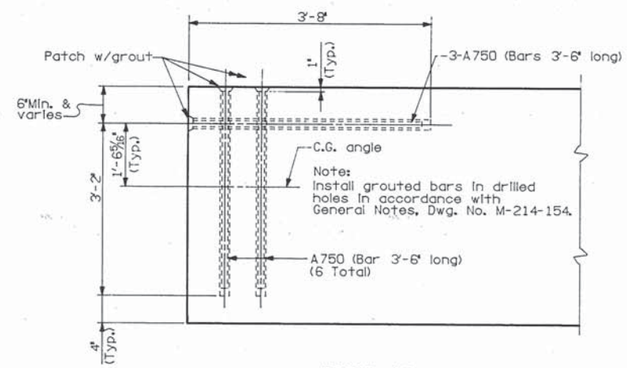

DETAIL "H"

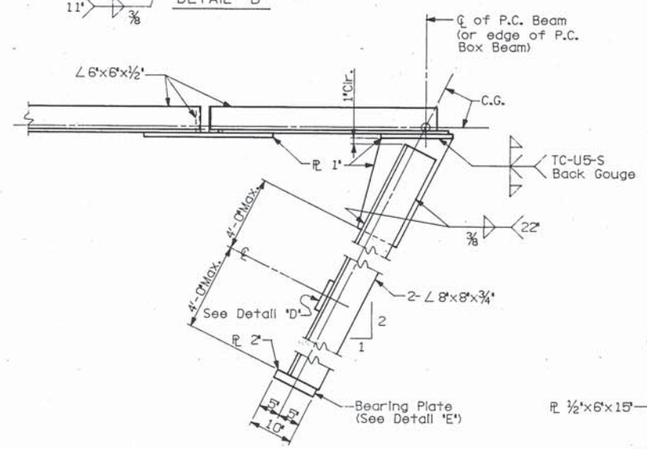

DETAIL "C"

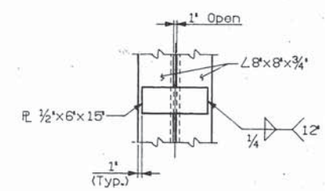

DETAIL "D"

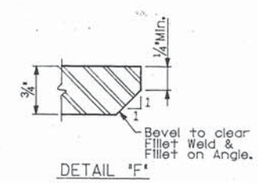

DETAIL "F"

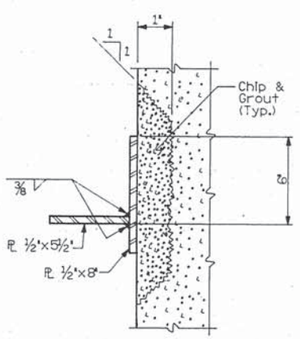

SECTION A-A

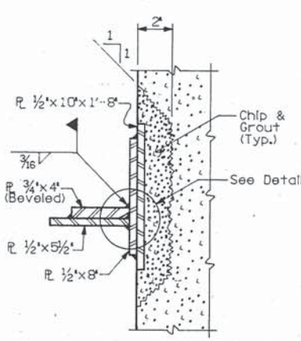

SECTION B-B

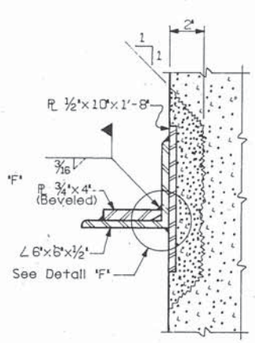

SECTION C-C

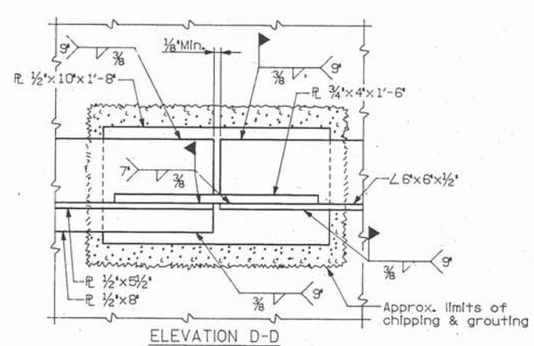

ELEVATION D-D

Notes Con't:

Drilled-in anchors shall be in accordance with General Notes.

Riser blocks to be poured monolithically with Cantilever cap beam.

Elastomeric pads shall be in place a minimum of one day before being disturbed by setting beams. Place rubber bonding cement in such a way that column surfaces will not be stained.

Riser block bearing pad surface to conform to bottom of beam grade.

Anchor bolts shall be in place when Cantilever cap is poured.

Reinforcement shall be adjusted as needed to prevent interference with anchor bolt placement. Drilled and grouted anchor bolts shall not be allowed.

CONSTR. NO. 80001-3152-44

PROJECT NO.	YEAR	SHEET NO.
IR-40-5(91)257	1989	

REVISIONS

NO.	DATE	BY	BRIEF DESCRIPTION

Notes:

For General Notes, see Dwg No. M-214-154.

Dimensions shown on this drawing are necessarily approximate. Contractor shall field verify dimensions of existing structure before proceeding with work, which includes but is not limited to the fabrication of structural steel, reinforcement, girders and formwork.

All welds and weld inspections to be in accordance with ANSI/AASHTO/AWS D1.5-88 and Special Provision No. 602. All welds, including fillet welds, to be inspected. All structural steel shall be considered main members for the purpose of determining frequency of inspection of fillet welds.

All structural steel not completely encased in concrete shall conform to AASHTO M 222 (ASTM A588), FY=50 ksi minimum. All structural steel completely encased in concrete shall conform to AASHTO M 183 (ASTM A36), FY=36 ksi.

All structural steel exposed to the atmosphere shall be finished with paint in accordance with General Notes for painting structural steel. In addition, surfaces not accessible after erection shall recieve an additional shop primer coat of inorganic zinc paint.

Chipping portions of existing pier necessary for bracket addition and drilling and grouting of dowels shall be considered incidental to the work and shall not be paid for separately.

The 4 inch chipping of concrete may not be sufficient to insure the removal of all unsound concrete. If more concrete removal is required to reach sound material, care shall be taken not to cut or otherwise damage existing reinforcement.

Concrete shall obtain 90 per cent of the specified 28 day strength prior to placement of the girders.

Grout shall be non-shrink, F'c=5,000 psi. Grout shall be allowed to achieve a strength of 3,000 psi before being loaded.

Care shall be taken during placement of concrete to insure that concrete completely fills space under structural steel gusset plates and that no pockets or voids exist adjacent to gusset plates.

Mechanical couplers shall be Cold Forged Mechanical Splices applied by octagonal dies and be capable of developing 125% of the specified yield strength of the reinforcement, in accordance with Provisions of AASHTO Art.8.32. Certification of AASHTO compliance will be required prior to approval. All costs associated with installing mechanical couplers, labor, equipment and incidentals shall be included in the cost for item 604-03.02.

STATE OF TENNESSEE
DEPARTMENT OF TRANSPORTATION
BUREAU OF HIGHWAYS

PIERS 1, 2 & 3
I-40 W.B.L. & E.B.L. OVER CANEY FORK RIVER
STA. 518+49.00 ℄ SURVEY E.B. & W.B. I-40
SMITH COUNTY
1989

DESIGNED BY	WGA	DATE	2-89
DRAWN BY	EAB	DATE	2-89
SUPERVISED BY	WSH	DATE	2-89
CHECKED BY	WGA	DATE	3-89

CORRECT _____ ENGINEER OF STRUCTURES

APPROVED _____ DIRECTOR OF HIGHWAYS

Scale: None

M-214-164A

U.S.A. No. DTN0XX706A

Note:
See Detail 'G' for dowel layout, Dwg. No. M-214-164. (Refer to Box Beam Detail Dwg. for location of dowels).

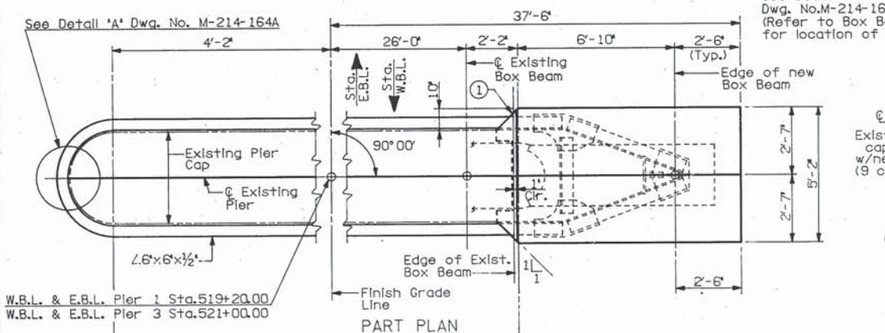

PART PLAN

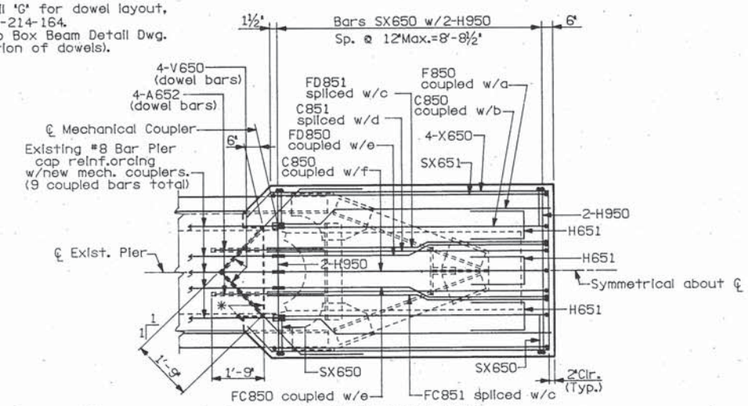

* Remove concrete to this line.

PLAN OF CANTILEVER CAP REINFORCING

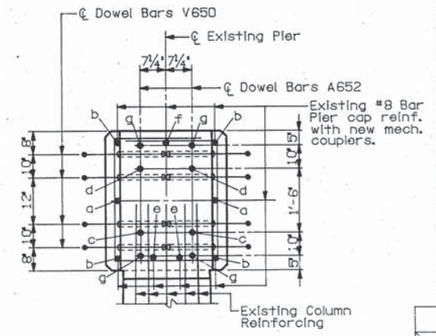

SECTION A-A

g - Denotes A652 dowel bars only.

CONSTR. NO. 80001-3152-44

PROJECT NO.	YEAR	SHEET NO.
IR-40-5(91)257	1989	

REVISIONS

NO.	DATE	BY	BRIEF DESCRIPTION

Note:
For notes, see Dwg. No. M-214-164A.

ESTIMATED QUANTITIES

Item / Pier No.	Class 'A' Concrete (Bridges) C.Y.	Structural Steel Lb.	Steel Bar Reinforcement (Bridges) Lb.
W.B.L. - 1	14	3,600	2660
W.B.L. - 3	14	3,600	2660
E.B.L. - 1	14	3,600	2660
E.B.L. - 3	14	3,600	2660

℄ Existing Bell Column

℄ Existing Bell Column

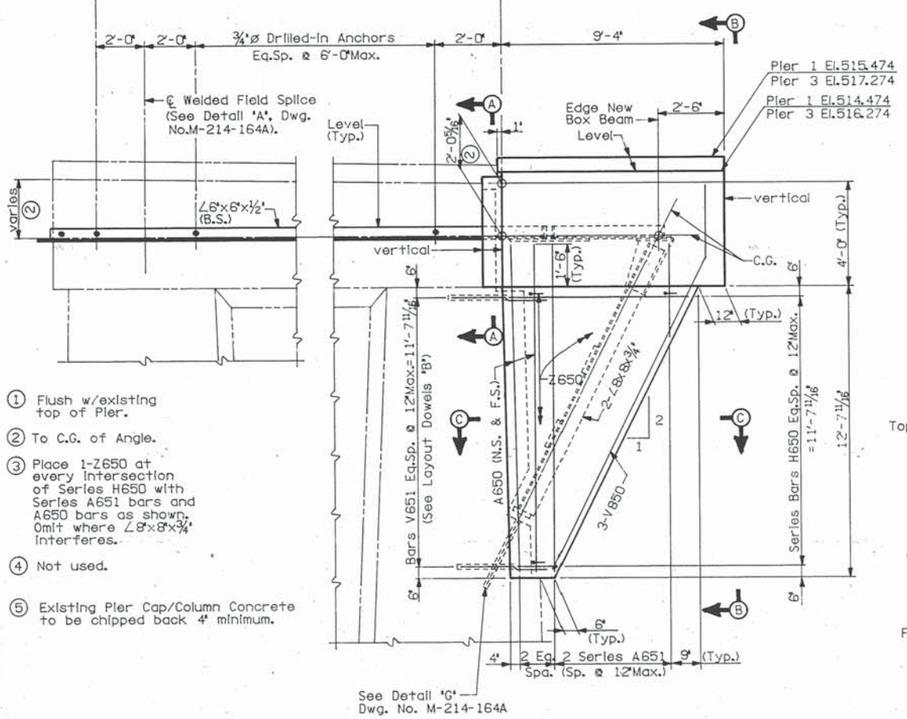

① Flush w/existing top of Pier.

② To C.G. of Angle.

③ Place 1-Z650 at every intersection of Series H650 with Series A651 bars and A650 bars as shown. Omit where ∠8"x8"x¾" interferes.

④ Not used.

⑤ Existing Pier Cap/Column Concrete to be chipped back 4" minimum.

PART ELEVATION
(Showing Cantilever Column Reinforcing)

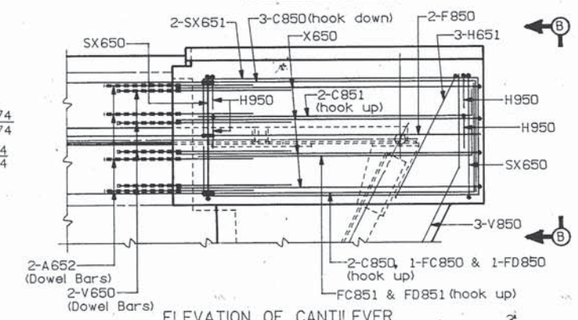

ELEVATION OF CANTILEVER CAP REINFORCING

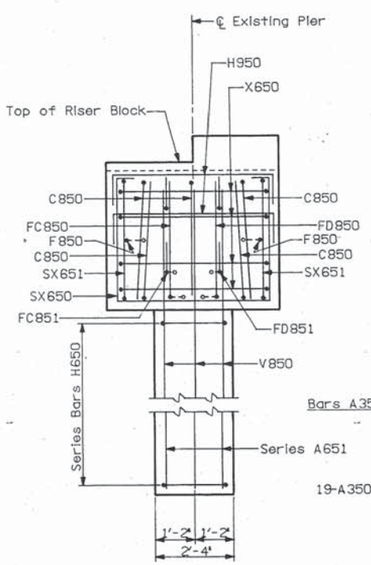

ELEVATION B-B

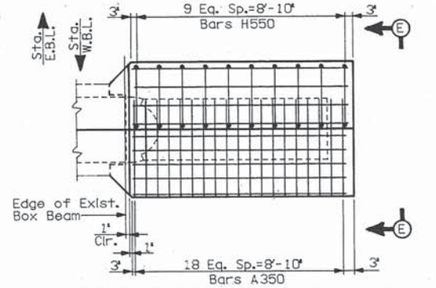

PLAN OF RISER BLOCK - W.B.L. & E.B.L.

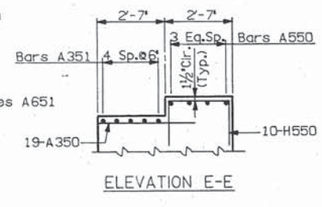

ELEVATION E-E

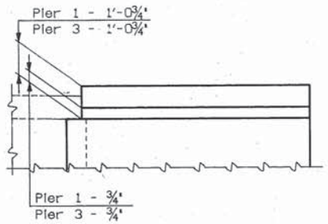

ELEVATION OF RISER BLOCK

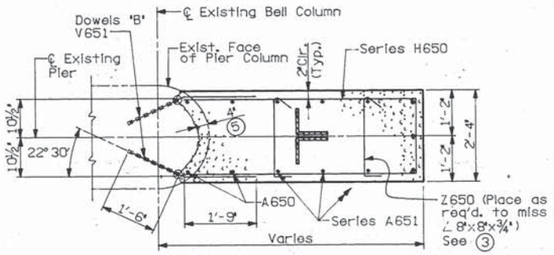

SECTION C-C
(Layout Dowels 'B')

STATE OF TENNESSEE
DEPARTMENT OF TRANSPORTATION
BUREAU OF HIGHWAYS

PIERS 1 & 3
I-40 W.B.L. & E.B.L. OVER CANEY FORK RIVER
STA. 518+49.00 ℄ SURVEY E.B. & W.B. I-40
SMITH COUNTY
1989

DESIGNED BY	WGA	DATE	2-89
DRAWN BY	EAB	DATE	2-89
SUPERVISED BY	WSH	DATE	2-89
CHECKED BY	WGA	DATE	3-89

CORRECT _____ ENGINEER OF STRUCTURES

APPROVED _____ DIRECTOR OF HIGHWAYS

Scale: None

M-214-164B

U.S.A. No. TN OXX 704A

ZF1508,243 TN8XX704A.D0961
DTN8XX 13-JAN-1989 11:54

SPAN A THRU D - W.B.L.

MARK	T	LOCATION	SZ	NO. RQ'D	DIMENSIONS FT-IN a	b	c	d	e	LENGTH FT-IN	WEIGHT LBS
A500	E	DECK	5	473	4- 9					4- 9	2343
A501	E	"	5	473	10- 9					10- 9	5303
⚠ A502	E	"	5	106	8-10					8-10	977
A503	E	"	5	583	30- 0					30- 0	18242
A504	E	"	5	102	30- 6					30- 6	3245
A505	E	"	5	51	35- 6					35- 6	1888
⚠ B500	E	"	5	482	10- 0	0- 7				10- 7	5321
⚠ B501	E	"	5	243	25- 9	0- 7				26- 4	6674
⚠ B502	E	"	5	243	19-10	0- 7				20- 5	5175
									***TOTAL WEIGHT (LBS)		⚠ 49168

⚠ ***TOTAL INCLUDES 49168 LBS OF EPOXY COATED BARS

ABUTMENT 1 W.B.L.

MARK	T	LOCATION	SZ	NO. RQ'D	DIMENSIONS FT-IN a	b	c	d	e	LENGTH FT-IN	WEIGHT LBS
A440		WINGWALL 1	4	4	5- 9					5- 9	15
A540		ABUTMENT	5	90	3- 8					3- 8	344
⚠ A541		ABUTMENT	5	5	24-4					24-4	127
A542		WINGWALL 1	5	1	7- 8					7- 8	8
A543		ABUTMENT	5	7	3- 6					3- 6	26
A544		"	5	3	6- 2					6- 2	19
⚠ A545		ABUTMENT	5	1	18-7					18-7	19
⚠ A740	E	"	7	4	19-4					19-4	158
⚠ A741		"	7	2	19-4					19-4	80
A940		WINGWALL 1	9	4	14- 6					14- 6	197
C440		"	4	2	7- 8	0- 8				8- 4	11
C441		"	4	1	7- 0	0- 8				7- 8	5
C442		"	4	1	4- 2	0- 8				4-10	3
C540	E	ABUTMENT	5	45	10- 0	0-10				10-10	508
C541		WINGWALL	5	1	7- 0	0-10				7-10	24
		@ 4 BAR SERIES		EACH	TO					TO	
					2- 9					3- 7	
⚠ C542		ABUTMENT	5	7	24-4	0-10				25-2	184
C544		WINGWALL 1	5	4	7- 8	0-10				8- 6	35
C545		ABUTMENT	5	7	3- 2	0-10				4- 0	29
E540		WINGWALL 1	5	4	2- 1½	0-10	0- 7⅛	0- 7⅛		3-10	16
H440		"	4	1	0- 9	3- 0				6- 9	24
		@ 4 BAR SERIES		EACH		TO				TO	
						5- 1				10-11	
H441		"	4	2	0- 9	5- 8				12- 1	16
H540		ABUTMENT	5	45	0- 9	5- 8				12- 1	567
L540	E	"	5	3	1- 9	3- 2	0- 6			10-10	34
RA440		WINGWALL 1	4	6	0- 8	1- 6	0- 9½	2- 1½	1- 6	5- 1	20
RA540		ABUTMENT	5	42	0-10	1- 9	0- 6	2- 5	1- 8½	5- 6	241
V441		WINGWALL 1	4	2	2- 4	6- 0	5- 4	2- 9		8- 4	11

⚠ FOR CONTINUATION SEE DRAWING NO. M-214-166A

***TOTAL WEIGHT (LBS) 3241

***TOTAL INCLUDES 899 LBS OF EPOXY COATED BARS

***TOTAL INCLUDES 2342 LBS OF NON EPOXY COATED BARS

PIER 1 - W.B.L.

MARK	T	LOCATION	SZ	NO. RQ'D	DIMENSIONS FT-IN a	b	c	d	e	LENGTH FT-IN	WEIGHT LBS
A350		RISER BLOCK	3	19	3- 5					3- 5	24
A351		"	3	5	9- 1					9- 1	17
A550		"	5	4	9- 1					9- 1	38
A650		CANT.COLUMN	6	4	13-11¾					14- 0	84
A651		"	6	2	13-11¾					14- 0	175
		@ 7 BAR SERIES		EACH	TO					TO	
					2- 7½					2- 8	
A652		CANT.CAP	6	8	3- 6					3- 6	42
C850		"	8	5	8-11	3- 5½				12- 5	166
C851		"	8	2	9- 2½	1- 0				10- 3	55
F850		"	8	2	1- 4¼	0- 9	7- 0	0- 6¼	0- 6¼	9- 1	49
FC850		"	8	1	4- 5½	0-10⅜	3- 8	0- 9	3- 5½	12- 5	33
FC851		"	8	1	5- 1	0- 2	3- 8	0- 1¾	1- 0	9-11	26
FD850		"	8	1	4- 5¾	0-10⅜	3- 8	0- 9	3- 5½	12- 6	33
FD851		"	8	1	5- 1	0- 2	3- 8	0- 1¾	1- 0	9-11	26
H550		RISER BLOCK	5	10	2- 4	2- 2				6- 8	70
H650		CANT.COLUMN	6	1	2- 0	7- 4				16- 8	207
		@ 13 BAR SERIES		EACH		TO				TO	
						1- 3				4- 6	
H651		CANT.CAP	6	3	1- 0	4- 0				9- 0	41
H950		"	9	20	4-10	1- 0				6-10	465
SX650		"	6	10	4- 9½	3- 7½	1- 0			14- 1	212
SX651		"	6	2	3- 5¾	9- 2⅛	1- 9			25- 4	76
V650		"	6	8	3- 3	1- 9	1- 2⅞	1- 2⅞		5- 0	60
V651		CANT.COLUMN	6	26	1- 9	1- 9	1- 7⅜	0- 8		3- 6	137
V850		"	8	3	15- 6½	2- 4½	2- 1½	1- 0¾		17-11	144
X650		CANT.CAP	6	4	4- 7¾	9- 1½	1- 0	0- 8½		24-11	150
Z650		CANT.COLUMN	6	60	1- 0	2- 0	0- 8			3- 8	330
									***TOTAL WEIGHT (LBS)		2583

PIER 2 - W.B.L.

MARK	T	LOCATION	SZ	NO. RQ'D	DIMENSIONS FT-IN a	b	c	d	e	LENGTH FT-IN	WEIGHT LBS
A350		RISER BLOCK	3	19	4-10					4-10	35
A351		"	3	11	9- 0					9- 0	37
A650		CANT.COLUMN	6	4	13-11¾					14- 0	84
A651		"	6	2	13-11¾					14- 0	175
		@ 7 BAR SERIES		EACH	TO					TO	
					2- 7½					2- 8	
A652		CANT.CAP	6	8	3- 6					3- 6	42
C850		"	8	5	8-11	3- 5½				12- 5	166
C851		"	8	2	9- 2½	1- 0				10- 3	55
F850		"	8	2	1- 4¼	0- 9	7- 0	0- 6¼	0- 6¼	9- 1	49
FC850		"	8	1	4- 5½	0-10⅜	3- 8	0- 9	3- 5½	12- 5	33
FC851		"	8	1	5- 1	0- 2	3- 8	0- 1¾	1- 0	9-11	26
FD850		"	8	1	4- 5¾	0-10⅜	3- 8	0- 9	3- 5½	12- 6	33
FD851		"	8	1	5- 1	0- 2	3- 8	0- 1¾	1- 0	9-11	26
H550		RISER BLOCK	5	10	2- 4	2- 2				6- 8	70
H650		CANT.COLUMN	6	1	2- 0	7- 4				16- 8	207
		@ 13 BAR SERIES		EACH		TO				TO	
						1- 3				4- 6	
H651		CANT.CAP	6	3	1- 0	4- 0				9- 0	41
H950		"	9	20	4-10	1- 0				6-10	465
SX650		"	6	10	4- 9½	3- 7½	1- 0			14- 1	212
SX651		"	6	2	3- 5¾	9- 2⅛	1- 9			25- 4	76
V650		"	6	8	3- 3	1- 9	1- 2⅞	1- 2⅞		5- 0	60
V651		CANT.COLUMN	6	26	1- 9	1- 9	1- 7⅜	0- 8		3- 6	137
V850		"	8	3	15- 6½	2- 4½	2- 1½	1- 0¾		17-11	144
X650		CANT.CAP	6	4	4- 7¾	9- 1½	1- 0	0- 8½		24-11	150
Z650		CANT.COLUMN	6	60	1- 0	2- 0	0- 8			3- 8	330
									***TOTAL WEIGHT (LBS)		2660

PIER 3 - W.B.L.

MARK	T	LOCATION	SZ	NO. RQ'D	DIMENSIONS FT-IN a	b	c	d	e	LENGTH FT-IN	WEIGHT LBS
A350		RISER BLOCK	3	19	3- 5					3- 5	24
A351		"	3	5	9- 1					9- 1	17
A550		"	5	4	9- 1					9- 1	38
A650		CANT.COLUMN	6	4	13-11¾					14- 0	84
A651		"	6	2	13-11¾					14- 0	175
		@ 7 BAR SERIES		EACH	TO					TO	
					2- 7½					2- 8	
A652		CANT.CAP	6	8	3- 6					3- 6	42
C850		"	8	5	8-11	3- 5½				12- 5	166
C851		"	8	2	9- 2½	1- 0				10- 3	55
F850		"	8	2	1- 4¼	0- 9	7- 0	0- 6¼	0- 6¼	9- 1	49
FC850		"	8	1	4- 5½	0-10⅜	3- 8	0- 9	3- 5½	12- 5	33
FC851		"	8	1	5- 1	0- 2	3- 8	0- 1¾	1- 0	9-11	26
FD850		"	8	1	4- 5¾	0-10⅜	3- 8	0- 9	3- 5½	12- 6	33
FD851		"	8	1	5- 1	0- 2	3- 8	0- 1¾	1- 0	9-11	26
H550		RISER BLOCK	5	10	2- 4	2- 2				6- 8	70
H650		CANT.COLUMN	6	1	2- 0	7- 4				16- 8	207
		@ 13 BAR SERIES		EACH		TO				TO	
						1- 3				4- 6	
H651		CANT.CAP	6	3	1- 0	4- 0				9- 0	41
H950		"	9	20	4-10	1- 0				6-10	465
SX650		"	6	10	4- 9½	3- 7½	1- 0			14- 1	212
SX651		"	6	2	3- 5¾	9- 2⅛	1- 9			25- 4	76
V650		"	6	8	3- 3	1- 9	1- 2⅞	1- 2⅞		5- 0	60
V651		CANT.COLUMN	6	26	1- 9	1- 9	1- 7⅜	0- 8		3- 6	137
V850		"	8	3	15- 6½	2- 4½	2- 1½	1- 0¾		17-11	144
X650		CANT.CAP	6	4	4- 7¾	9- 1½	1- 0	0- 8½		24-11	150
Z650		CANT.COLUMN	6	60	1- 0	2- 0	0- 8			3- 8	330
									***TOTAL WEIGHT (LBS)		2660

ABUTMENT 2 W.B.L.

MARK	T	LOCATION	SZ	NO. RQ'D	DIMENSIONS FT-IN a	b	c	d	e	LENGTH FT-IN	WEIGHT LBS
A441		WINGWALL 2	4	4	7- 2					7- 2	19
A540		ABUTMENT	5	132	3-11					3-11	540 ⚠
A541		"	5	5	24-4					24-4	127 ⚠
A542		WINGWALL 2	5	1	7- 8					7- 8	8
A544		ABUTMENT	5	7	8- 8					8- 8	63 ⚠
A545		ABUTMENT	5	1	18-7					18-7	19 ⚠
A940		WINGWALL 2	9	4	14- 6					14- 6	197
~~A1000~~		~~ABUTMENT~~	~~10~~	~~10~~	~~43- 8~~					~~43- 8~~	~~1879~~ ⚠
A1001		ABUTMENT	10	10	24-4					24-4	1047 ⚠
C440		WINGWALL 2	4	2	7- 8	0- 8				8- 4	11
C443		"	4	1	6-10	0- 8				7- 6	5
C444		"	4	1	5- 0	0- 8				5- 8	4
C445		WINGWALL 2	4	1	3- 2	0- 8				3-10	3
C546	E	ABUTMENT	5	84	10- 0	2-6				12-6	1095 ⚠
C542		"	5	8	24-4	0-10				25-2	210 ⚠
C543		WINGWALL 2	5	1	6-10	0-10				7- 8	30
		@ 5 BAR SERIES		EACH	TO					TO	
					3- 2					4- 0	
C544		"	5	4	7- 8	0-10				8- 6	35
E540		"	5	5	2- 1½	0-10	0- 7⅛	0- 7⅛		3-10	20
H442		WINGWALL 2	4	1	0- 9	6- 0				12- 9	26
		@ 4 BAR SERIES		EACH		TO				TO	
						3- 0				6- 9	
H443		"	4	2	0- 9	7- 2				15- 1	20
P540		ABUTMENT	5	84	7-2	0-9	6-2			14-1	1234 ⚠
H541		ABUTMENT	5	9	4- 2	0- 6				5- 2	48
L540	E	"	5	3	1- 9	3- 2	0- 6			10-10	34
L541		ABUTMENT	5	9	3- 8	3- 3	0- 6			14-10	139
P500		ABUTMENT	5	9	2- 8	3- 3	0-10			6- 9	63
RA440		WINGWALL 2	4	6	0- 8	1- 6	0- 9½	2- 1½	1- 6	5- 1	20
RA540		ABUTMENT	5	42	0-10	1- 9	0- 6	2- 5	1- 8½	5- 6	241
V440		WINGWALL 2	4	2	2- 4	6-10	5- 4	4- 3½		9- 2	12

FOR CONTINUATION SEE DRAWING M-214-166A

***TOTAL WEIGHT (LBS) 7430 ⚠

***TOTAL INCLUDES ⚠ 2254 LBS OF EPOXY COATED BARS

***TOTAL INCLUDES ⚠ 5176 LBS OF NON EPOXY COATED BARS

ABUTMENT 1 W.B.L. FOUNDATION REPAIR

MARK	T	LOCATION	SZ	NO. RQ'D	DIMENSIONS FT-IN a	b	c	d	e	LENGTH FT-IN	WEIGHT LBS
A680	E	FD'N REPAIR	6	24	16-6					16-6	595 ⚠
C480	E	"	4	60	1-0	3-0				4-0	160
									***TOTAL WEIGHT (LBS)		755 ⚠

***TOTAL INCLUDES ⚠ 755 LBS OF EPOXY COATED BARS

CONSTR. NO. 80001-3152-44

PROJECT NO.	YEAR	SHEET NO.
IR-40-5(91)257	1989	

REVISIONS

NO.	DATE	BY	BRIEF DESCRIPTION
⚠ 1	9/29/89	DWT	REVISED REINF.

REINFORCING STEEL CODE

TYPE	SIZE	SERIES
A	5	06*

Note: Dimensions shown on this sheet are outside to outside of bar. Standard C.R.S.I. Hook Details shall apply, except as noted.

*LOCATION	SERIES
SUPERSTRUCTURE	00
ABUTMENT	40
PIER	50
RETAINING WALL	70
APPROACH SLAB	90

Note: An 'E' in the 'T', Type, column indicates that the bar shall be Epoxy-Coated.

STATE OF TENNESSEE
DEPARTMENT OF TRANSPORTATION
BUREAU OF HIGHWAYS

BILL OF STEEL

I-40 OVER
CANEY FORK RIVER
STA. 518+50
℄ SURVEY E.B. & W.B. I-40
SMITH COUNTY
1989

DESIGNED BY _____ DATE 1-89
DRAWN BY _____ DATE 1-89
SUPERVISED BY W. S. HUFFSTETLER DATE 1-89
CHECKED BY _____ DATE _____

CORRECT _____ ENGINEER OF STRUCTURES
APPROVED _____ DIRECTOR OF HIGHWAYS

M-214-165

B.S.I. No. DTNOXX704A

ZFH598.243DTNOXX704.DGN
DTNOXX
13-JAN-1989 11:54

SPAN A THRU D - EBL

MARK	T	LOCATION	SZ	NO. RQ'D	DIMENSIONS FT-IN a	b	c	d	e	LENGTH FT-IN	WEIGHT LBS
A500	E	DECK	5	473	4- 9					4- 9	2343
A501	E	"	5	473	10- 9					10- 9	5303
⚠ A502	E	"	5	106	8-10					8-10	977
A503	E	"	5	583	30- 0					30- 0	18242
A504	E	"	5	102	30- 6					30- 6	3245
A505	E	"	5	51	35- 6					35- 6	1888
⚠ B500	E	"	5	482	10- 0	0- 7				10- 7	5321
⚠ B501	E	"	5	243	25- 9	0- 7				26-4	6674
⚠ B502	E	"	5	243	19-10	0- 7				20-5	5175

***TOTAL WEIGHT (LBS) ⚠ 49168

⚠ ***TOTAL INCLUDES 49168 LBS OF EPOXY COATED BARS

ABUTMENT 1 E.B.L.

MARK	T	LOCATION	SZ	NO. RQ'D	DIMENSIONS FT-IN a	b	c	d	e	LENGTH FT-IN	WEIGHT LBS
A440		WINGWALL 1	4	4	5- 9					5- 9	15
A540		ABUTMENT	5	90	3- 8					3- 8	344
⚠ A541		ABUTMENT	5	5	24-4					24-4	127
A542		WINGWALL 1	5	1	7- 8					7- 8	8
A543		ABUTMENT	5	7	3- 6					3- 6	26
A544		"	5	3	6- 2					6- 2	19
⚠ A545		ABUTMENT	5	1	18-7					18-7	19
⚠ A740	E	"	7	4	19-4					19-4	158
⚠ A741		"	7	2	19-4					19-4	80
A940		WINGWALL 1	9	4	14- 6					14- 6	197
C440		"	4	2	7- 8	0- 8				8- 4	11
C441		"	4	1	7- 0	0- 8				7- 8	5
C442		"	4	1	4- 2	0- 8				4-10	3
C540	E	ABUTMENT	5	45	10- 0	0-10				10-10	508
C541		WINGWALL	5	1	7- 0	0-10				7-10	24
		@ 4 BAR SERIES		EACH	TO					TO	
					2- 9					3- 7	
⚠ C542		ABUTMENT	5	7	24-4	0-10				25-2	184
C544		WINGWALL 1	5	4	7- 8	0-10				8- 6	35
C545		ABUTMENT	5	7	3- 2	0-10				4- 0	29
E540		WINGWALL 1	5	4	2- 1½	0-10	0- 7⅛	0- 7⅛		3-10	16
H440		"	4	1	0- 9	3- 0				6- 9	24
		@ 4 BAR SERIES		EACH		TO				TO	
						5- 1				10-11	
H441		"	4	2	0- 9	5- 8				12- 1	16
H540		ABUTMENT	5	45	0- 9	5- 8				12- 1	567
L540	E	"	5	3	1- 9	3- 2	0- 6			10-10	34
RA440		WINGWALL 1	4	6	0- 8	1- 6	0- 9½	2- 1½	1- 6	5- 1	20
RA540		ABUTMENT	5	42	0-10	1- 9	0- 6	2- 5	1- 8½	5- 6	241
V441		WINGWALL 1	4	2	2- 4	6- 0	5- 4	2- 9		8- 4	11

⚠ FOR CONTINUATION SEE DRAWING NO. M-214-166A

***TOTAL WEIGHT (LBS) 3241

***TOTAL INCLUDES 899 LBS OF EPOXY COATED BARS

***TOTAL INCLUDES 2342 LBS OF NON EPOXY COATED BARS

PIER 1 - E.B.L.

MARK	T	LOCATION	SZ	NO. RQ'D	DIMENSIONS FT-IN a	b	c	d	e	LENGTH FT-IN	WEIGHT LBS
A350		RISER BLOCK	3	19	3- 5					3- 5	24
A351		"	3	5	9- 1					9- 1	17
A550		"	5	4	9- 1					9- 1	38
A650		CANT.COLUMN	6	4	13-11¾					14- 0	84
A651		"	6	2	13-11¾					14- 0	175
		@ 7 BAR SERIES		EACH	TO					TO	
					2- 7½					2- 8	
A652		CANT.CAP	6	8	3- 6					3- 6	42
C850		"	8	5	8-11	3- 5½				12- 5	166
C851		"	8	2	9- 2½	1- 0				10- 3	55
F850		"	8	2	1- 4¼	0- 9	7- 0	0- 6¼	0- 6¼	9- 1	49
FC850		"	8	1	4- 5½	0-10⅜	3- 8	0- 9	3- 5½	12- 5	33
FC851		"	8	1	5- 1	0- 2	3- 8	0- 1¾	1- 0	9-11	26
FD850		"	8	1	4- 5¾	0-10⅜	3- 8	0- 9	3- 5½	12- 6	33
FD851		"	8	1	5- 1	0- 2	3- 8	0- 1¾	1- 0	9-11	26
H550		RISER BLOCK	5	10	2- 4	2- 2				6- 8	70
H650		CANT.COLUMN	6	1	2- 0	7- 4				16- 8	207
		@ 13 BAR SERIES		EACH		TO				TO	
						1- 3				4- 6	
H651		CANT.CAP	6	3	1- 0	4- 0				9- 0	41
H950		"	9	20	4-10	1- 0				6-10	465
SX650		"	6	10	4- 9½	3- 7½	1- 0			14- 1	212
SX651		"	6	2	3- 5¾	9- 2⅛	1- 9			25- 4	76
V650		"	6	8	3- 3	1- 9	1- 2⅞	1- 2⅞		5- 0	60
V651		CANT.COLUMN	6	26	1- 9	1- 9	1- 7⅜	0- 8		3- 6	137
V850		"	8	3	15- 6½	2- 4½	2- 1½	1- 0¾		17-11	144
X650		CANT.CAP	6	4	4- 7¾	9- 1½	1- 0	0- 8½		24-11	150
Z650		CANT.COLUMN	6	60	1- 0	2- 0	0- 8			3- 8	330

***TOTAL WEIGHT (LBS) 2583

PIER 2 - E.B.L.

MARK	T	LOCATION	SZ	NO. RQ'D	DIMENSIONS FT-IN a	b	c	d	e	LENGTH FT-IN	WEIGHT LBS
A350		RISER BLOCK	3	19	4-10					4-10	35
A351		"	3	11	9- 0					9- 0	37
A650		CANT.COLUMN	6	4	13-11¾					14- 0	84
A651		"	6	2	13-11¾					14- 0	175
		@ 7 BAR SERIES		EACH	TO					TO	
					2- 7½					2- 8	
A652		CANT.CAP	6	8	3- 6					3- 6	42
C850		"	8	5	8-11	3- 5½				12- 5	166
C851		"	8	2	9- 2½	1- 0				10- 3	55
F850		"	8	2	1- 4¼	0- 9	7- 0	0- 6¼	0- 6¼	9- 1	49
FC850		"	8	1	4- 5½	0-10⅜	3- 8	0- 9	3- 5½	12- 5	33
FC851		"	8	1	5- 1	0- 2	3- 8	0- 1¾	1- 0	9-11	26
FD850		"	8	1	4- 5¾	0-10⅜	3- 8	0- 9	3- 5½	12- 6	33
FD851		"	8	1	5- 1	0- 2	3- 8	0- 1¾	1- 0	9-11	26
H550		RISER BLOCK	5	10	2- 4	2- 2				6- 8	70
H650		CANT.COLUMN	6	1	2- 0	7- 4				16- 8	207
		@ 13 BAR SERIES		EACH		TO				TO	
						1- 3				4- 6	
H651		CANT.CAP	6	3	1- 0	4- 0				9- 0	41
H950		"	9	20	4-10	1- 0				6-10	465
SX650		"	6	10	4- 9½	3- 7½	1- 0			14- 1	212
SX651		"	6	2	3- 5¾	9- 2⅛	1- 9			25- 4	76
V650		"	6	8	3- 3	1- 9	1- 2⅞	1- 2⅞		5- 0	60
V651		CANT.COLUMN	6	26	1- 9	1- 9	1- 7⅜	0- 8		3- 6	137
V850		"	8	3	15- 6½	2- 4½	2- 1½	1- 0¾		17-11	144
X650		CANT.CAP	6	4	4- 7¾	9- 1½	1- 0	0- 8½		24-11	150
Z650		CANT.COLUMN	6	60	1- 0	2- 0	0- 8			3- 8	330

***TOTAL WEIGHT (LBS) 2660

PIER 3 - E.B.L.

MARK	T	LOCATION	SZ	NO. RQ'D	DIMENSIONS FT-IN a	b	c	d	e	LENGTH FT-IN	WEIGHT LBS
A350		RISER BLOCK	3	19	3- 5					3- 5	24
A351		"	3	5	9- 1					9- 1	17
A550		"	5	4	9- 1					9- 1	38
A650		CANT.COLUMN	6	4	13-11¾					14- 0	84
A651		"	6	2	13-11¾					14- 0	175
		@ 7 BAR SERIES		EACH	TO					TO	
					2- 7½					2- 8	
A652		CANT.CAP	6	8	3- 6					3- 6	42
C850		"	8	5	8-11	3- 5½				12- 5	166
C851		"	8	2	9- 2½	1- 0				10- 3	55
F850		"	8	2	1- 4¼	0- 9	7- 0	0- 6¼	0- 6¼	9- 1	49
FC850		"	8	1	4- 5½	0-10⅜	3- 8	0- 9	3- 5½	12- 5	33
FC851		"	8	1	5- 1	0- 2	3- 8	0- 1¾	1- 0	9-11	26
FD850		"	8	1	4- 5¾	0-10⅜	3- 8	0- 9	3- 5½	12- 6	33
FD851		"	8	1	5- 1	0- 2	3- 8	0- 1¾	1- 0	9-11	26
H550		RISER BLOCK	5	10	2- 4	2- 2				6- 8	70
H650		CANT.COLUMN	6	1	2- 0	7- 4				16- 8	207
		@ 13 BAR SERIES		EACH		TO				TO	
						1- 3				4- 6	
H651		CANT.CAP	6	3	1- 0	4- 0				9- 0	41
H950		"	9	20	4-10	1- 0				6-10	465
SX650		"	6	10	4- 9½	3- 7½	1- 0			14- 1	212
SX651		"	6	2	3- 5¾	9- 2⅛	1- 9			25- 4	76
V650		"	6	8	3- 3	1- 9	1- 2⅞	1- 2⅞		5- 0	60
V651		CANT.COLUMN	6	26	1- 9	1- 9	1- 7⅜	0- 8		3- 6	137
V850		"	8	3	15- 6½	2- 4½	2- 1½	1- 0¾		17-11	144
X650		CANT.CAP	6	4	4- 7¾	9- 1½	1- 0	0- 8½		24-11	150
Z650		CANT.COLUMN	6	60	1- 0	2- 0	0- 8			3- 8	330

***TOTAL WEIGHT (LBS) 2660

ABUTMENT 2 E.B.L.

MARK	T	LOCATION	SZ	NO. RQ'D	DIMENSIONS FT-IN a	b	c	d	e	LENGTH FT-IN	WEIGHT LBS
A441		WINGWALL 2	4	4	7- 2					7- 2	19
A540		ABUTMENT	5	132	3-11					3-11	540
⚠ A541		"	5	5	24-4					24-4	127
A542		WINGWALL 2	5	1	7- 8					7- 8	8
A544		ABUTMENT	5	7	8- 8					8- 8	63
A545		ABUTMENT	5	1	18-7					18-7	19
A940		WINGWALL 2	9	4	14- 6					14- 6	197
~~A1000~~		~~ABUTMENT~~	~~10~~	~~10~~	~~43- 8~~					~~43- 8~~	~~1879~~
A1001		ABUTMENT	10	10	24-4					24-4	1047
C440		WINGWALL 2	4	2	7- 8	0- 8				8- 4	11
C443		"	4	1	6-10	0- 8				7- 6	5
C444		"	4	1	5- 0	0- 8				5- 8	4
C445		WINGWALL 2	4	1	3- 2	0- 8				3-10	3
C546	E	ABUTMENT	5	84	10- 0	2- 6				12-6	1095
C542		"	5	8	24-4	0-10				25-2	210
C543		WINGWALL 2	5	1	6-10	0-10				7- 8	30
		@ 5 BAR SERIES		EACH	TO					TO	
					3- 2					4- 0	
C544		"	5	4	7- 8	0-10				8- 6	35
E540		"	5	5	2- 1½	0-10	0- 7⅛	0- 7⅛		3-10	20
H442		WINGWALL 2	4	1	0- 9	6- 0				12- 9	26
		@ 4 BAR SERIES		EACH		TO				TO	
						3- 0				6- 9	
H443		"	4	2	0- 9	7- 2				15- 1	20
P540	E	ABUTMENT	5	84	7-2	0-5	6-2			14-1	1234
H541		ABUTMENT	5	9	4- 2	0- 6				5- 2	48
L540	E	"	5	3	1- 9	3- 2	0- 6			10-10	34
L541		ABUTMENT	5	9	3- 8	3- 3	0- 6			14-10	139
P500		ABUTMENT	5	9	2- 8	3- 3	0-10			6- 9	63
RA440		WINGWALL 2	4	6	0- 8	1- 6	0- 9½	2- 1½	1- 6	5- 1	20
RA540		ABUTMENT	5	42	0-10	1- 9	0- 6	2- 5	1- 8½	5- 6	241
V440		WINGWALL 2	4	2	2- 4	6-10	5- 4	4- 3½		9- 2	12

⚠ FOR CONTINUATION SEE SHEET M-214-166A

⚠ ***TOTAL WEIGHT (LBS) 7430

⚠ ***TOTAL INCLUDES ⚠ 2254 LBS OF EPOXY COATED BARS

⚠ ***TOTAL INCLUDES ⚠ 5176 LBS OF NON EPOXY COATED BARS

ABUTMENT 1 E.B.L. FOUNDATION REPAIR

MARK	T	LOCATION	SZ	NO. RQ'D	DIMENSIONS FT-IN a	b	c	d	e	LENGTH FT-IN	WEIGHT LBS
A680	E	FD'N REPAIR	6	24	16-6					16-6	595
C480	E	"	4	60	1-0	3-0				4-0	160

⚠ ***TOTAL WEIGHT (LBS) 755

⚠ ***TOTAL INCLUDES ⚠ 755 LBS OF EPOXY COATED BARS

CONSTR. NO. 80001-3152-44

PROJECT NO.	YEAR	SHEET NO.
IR-40-5(91)257	1989	

REVISIONS

NO.	DATE	BY	BRIEF DESCRIPTION
⚠	9/29/89	DWT	REVISED REINF.

REINFORCING STEEL CODE

TYPE	SIZE	SERIES
A	5	06*

Note: Dimensions shown on this sheet are outside to outside of bar. Standard C.R.S.I. Hook Details shall apply, except as noted.

*LOCATION	SERIES
SUPERSTRUCTURE	00
ABUTMENT	40
PIER	50
RETAINING WALL	70
APPROACH SLAB	90

Note: An 'E' in the 'T', Type, column indicates that the bar shall be Epoxy-Coated.

STATE OF TENNESSEE
DEPARTMENT OF TRANSPORTATION
BUREAU OF HIGHWAYS

BILL OF STEEL

I-40 OVER
CANEY FORK RIVER
STA. 518+50
℄ SURVEY E.B. & W.B. I-40
SMITH COUNTY
1989

DESIGNED BY _____ DATE 1-89
DRAWN BY _____ DATE 1-89
SUPERVISED BY W. S. HUEFSTETLER DATE 1-89
CHECKED BY _____ DATE _____

CORRECT _____
ENGINEER OF STRUCTURES

APPROVED _____
DIRECTOR OF HIGHWAYS

M-214-166

BRIDGE 1 SUPERSTRUCTURE-SPANS A THRU C (EBL) (CONTINUED)

MARK	T	LOCATION	SZ	NO. RQ'D	DIMENSIONS FT-IN a	b	c	d	e	LENGTH FT-IN	WEIGHT LBS
A511	E	DECK	5	1	25- 7					25- 7	692
		@ 46 BAR SERIES		EACH	TO					TO	
					3- 3					3- 3	
A512	E	"	5	1	19- 8					19- 8	406
		@ 34 BAR SERIES		EACH	TO					TO	
					3- 3					3- 3	
B504	E	"	5	1	25- 8	0- 7				26- 3	720
		@ 45 BAR SERIES		EACH	TO					TO	
					3-10					4- 5	

BRIDGE 3 SUPERSTRUCTURE-SPANS A THRU E (WBL) (CONTINUED)

MARK	T	LOCATION	SZ	NO. RQ'D	DIMENSIONS FT-IN a	b	c	d	e	LENGTH FT-IN	WEIGHT LBS
A515	E	DECK	5	1	19- 2					19- 2	362
		@ 31 BAR SERIES		EACH	TO					TO	
					3- 3					3- 3	
A516	E	"	5	1	25- 1					25- 1	615
		@ 41 BAR SERIES		EACH	TO					TO	
					3- 8					3- 8	
A517	E	"	5	1	17- 8					17- 8	305
		@ 28 BAR SERIES		EACH	TO					TO	
					3- 3					3- 3	
A518	E	"	5	1	23- 7					23- 7	543
		@ 38 BAR SERIES		EACH	TO					TO	
					3-10					3-10	
A519	E	DROP BEAM	5	4	22- 8					22- 8	95
A702	E	"	7	2	24- 8					24- 8	101
A703	E	"	7	2	30- 9					30- 9	126
A801	E	"	8	3	22- 1					22- 1	177
A802	E	"	8	3	24- 8					24- 8	198
A803	E	"	8	3	30- 9					30- 9	246
B502	E	DECK	5	977	25- 9	0- 7				26- 4	26834
B503	E	"	5	999	19-10	0- 7				20- 5	21273
B504	E	"	5	1	19- 8	0- 7				20- 3	391
		@ 30 BAR SERIES		EACH	TO					TO	
					4- 2					4- 9	
B505	E	"	5	1	19- 8	0- 7				20- 3	380
		@ 28 BAR SERIES		EACH	TO					TO	
					5- 2					5- 9	

BRIDGE 3 SUPERSTRUCTURE-SPANS A THRU E (EBL) (CONTINUED)

MARK	T	LOCATION	SZ	NO. RQ'D	DIMENSIONS FT-IN a	b	c	d	e	LENGTH FT-IN	WEIGHT LBS
A515	E	DECK	5	1	19- 2					19- 2	362
		@ 31 BAR SERIES		EACH	TO					TO	
					3- 3					3- 3	
A516	E	"	5	1	25- 1					25- 1	615
		@ 41 BAR SERIES		EACH	TO					TO	
					3- 8					3- 8	
A517	E	"	5	1	17- 8					17- 8	305
		@ 28 BAR SERIES		EACH	TO					TO	
					3- 3					3- 3	
A518	E	"	5	1	23- 7					23- 7	543
		@ 38 BAR SERIES		EACH	TO					TO	
					3-10					3-10	
A519	E	DROP BEAM	5	4	22- 8					22- 8	95
A702	E	"	7	2	24- 8					24- 8	101
A703	E	"	7	2	30- 9					30- 9	126
A801	E	"	8	3	22- 1					22- 1	177
A802	E	"	8	3	24- 8					24- 8	198
A803	E	"	8	3	30- 9					30- 9	246
B502	E	DECK	5	973	25- 9	0- 7				26- 4	26724
B503	E	"	5	995	19-10	0- 7				20- 5	21188
B504	E	"	5	1	19- 8	0- 7				20- 3	391
		@ 30 BAR SERIES		EACH	TO					TO	
					4- 2					4- 9	

BRIDGE 3 SUPERSTRUCTURE-SPANS A THRU E (EBL) (CONTINUED)

MARK	T	LOCATION	SZ	NO. RQ'D	DIMENSIONS FT-IN a	b	c	d	e	LENGTH FT-IN	WEIGHT LBS
B505	E	"	5	1	19- 8	0- 7				20- 3	380
		@ 28 BAR SERIES		EACH	TO					TO	
					5- 2					5- 9	

BRIDGE 3-ABUTMENT 1 (WBL) (CONTINUED)

MARK	T	LOCATION	SZ	NO. RQ'D	DIMENSIONS FT-IN a	b	c	d	e	LENGTH FT-IN	WEIGHT LBS
A558		ABUTMENT	5	3	24- 8					24- 8	77
A942		"	9	3	23- 8					23- 8	241
A1002	E	"	10	6	24- 8					24- 8	637
A1003		"	10	8	30- 8					30- 8	1056
A1004		"	10	6	23- 2					23- 2	598

BRIDGE 3-ABUTMENT 2 (WBL) (CONTINUED)

MARK	T	LOCATION	SZ	NO. RQ'D	DIMENSIONS FT-IN a	b	c	d	e	LENGTH FT-IN	WEIGHT LBS
A558		ABUTMENT	5	3	24- 8					24- 8	77
A942		"	9	3	23- 8					23- 8	241
A1002	E	"	10	6	24- 8					24- 8	637
A1003		"	10	8	30- 8					30- 8	1056
A1004		"	10	6	23- 2					23- 2	598

BRIDGE 3-ABUTMENT 1 (EBL) (CONTINUED)

MARK	T	LOCATION	SZ	NO. RQ'D	DIMENSIONS FT-IN a	b	c	d	e	LENGTH FT-IN	WEIGHT LBS
A558		ABUTMENT	5	3	24- 8					24- 8	77
A942		"	9	3	23- 8					23- 8	241
A1002	E	"	10	6	24- 8					24- 8	637
A1003		"	10	8	30- 8					30- 8	1056
A1004		"	10	6	23- 2					23- 2	598

BRIDGE 3-ABUTMENT 2 (EBL) (CONTINUED)

MARK	T	LOCATION	SZ	NO. RQ'D	DIMENSIONS FT-IN a	b	c	d	e	LENGTH FT-IN	WEIGHT LBS
A558		ABUTMENT	5	3	24- 8					24- 8	77
A942		"	9	3	23- 8					23- 8	241
A1002	E	"	10	6	24- 8					24- 8	637
A1003		"	10	8	30- 8					30- 8	1056
A1004		"	10	6	23- 2					23- 2	598

BRIDGE 6-ABUTMENT 1 (WBL) (CONTINUED)

MARK	T	LOCATION	SZ	NO. RQ'D	DIMENSIONS FT-IN a	b	c	d	e	LENGTH FT-IN	WEIGHT LBS
A546		ABUTMENT	5	11	19- 4					19- 4	222
A742	E	"	7	4	24- 4					24- 4	199
A743		"	7	2	24- 4					24- 4	99

BRIDGE 6-ABUTMENT 2 (WBL) (CONTINUED)

MARK	T	LOCATION	SZ	NO. RQ'D	DIMENSIONS FT-IN a	b	c	d	e	LENGTH FT-IN	WEIGHT LBS
A546		ABUTMENT	5	12	19- 4					19- 4	242
A1002		"	10	6	17-10					17-10	460
A1003		"	10	4	19- 4					19- 4	333
A1004	E	"	10	6	19- 4					19- 4	499
A1005	E	"	10	6	24- 3					24- 3	626

BRIDGE 6-ABUTMENT 1 (EBL) (CONTINUED)

MARK	T	LOCATION	SZ	NO. RQ'D	DIMENSIONS FT-IN a	b	c	d	e	LENGTH FT-IN	WEIGHT LBS
A546		ABUTMENT	5	11	19- 4					19- 4	222
A742	E	"	7	4	24- 4					24- 4	199
A743		"	7	2	24- 4					24- 4	99

BRIDGE 6-ABUTMENT 2 (EBL) (CONTINUED)

MARK	T	LOCATION	SZ	NO. RQ'D	DIMENSIONS FT-IN a	b	c	d	e	LENGTH FT-IN	WEIGHT LBS
A546		"	5	12	19- 4					19- 4	242
A1002		"	10	6	17-10					17-10	460
A1003		"	10	4	19- 4					19- 4	333
A1004	E	"	10	6	19- 4					19- 4	499
A1005	E	"	10	6	24- 3					24- 3	626

CONSTR. NO. 80001-3152-44

PROJECT NO.	YEAR	SHEET NO.
IR-40-5(91)257	1989	

REVISIONS

NO.	DATE	BY	BRIEF DESCRIPTION
1	9/29/89	DWT	THIS SHEET ADDED

REINFORCING STEEL CODE

TYPE	SIZE	SERIES
A	5	06*

Note: Dimensions shown on this sheet are outside to outside of bar. Standard C.R.S.I. Hook Details shall apply, except as noted.

*LOCATION	SERIES
SUPERSTRUCTURE	00
ABUTMENT	40, 60-80
PIER	50

Note: An 'E' in the 'T', Type, column indicates that the bar shall be Epoxy-Coated.

DESIGNED BY DWT DATE 9/89
DRAWN BY EAB DATE 9/89
SUPERVISED BY WSH DATE 9/89
CHECKED BY DWT DATE 9/89

STATE OF TENNESSEE
DEPARTMENT OF TRANSPORTATION
BUREAU OF HIGHWAYS

BILL OF STEEL
BRIDGE NO. 1, 3 & 6
I-40 OVER CANEY FORK RIVER
℄ I-40 OVER HICKMAN CREEK
SMITH COUNTY
1989

CORRECT _____ ENGINEER OF STRUCTURES
APPROVED _____ DIRECTOR OF HIGHWAYS

M-214-166A

R.S.A. No. DTNOXX705A

ZF:u59L24\DTNOXX705A.DGN
DTNOXX 17-FEB-1989 13:05

CONSTR. NO. 80001-3152-44

PROJECT NO.	YEAR	SHEET NO.
IR-40-5(91)257	1989	

REVISIONS

NO.	DATE	BY	BRIEF DESCRIPTION

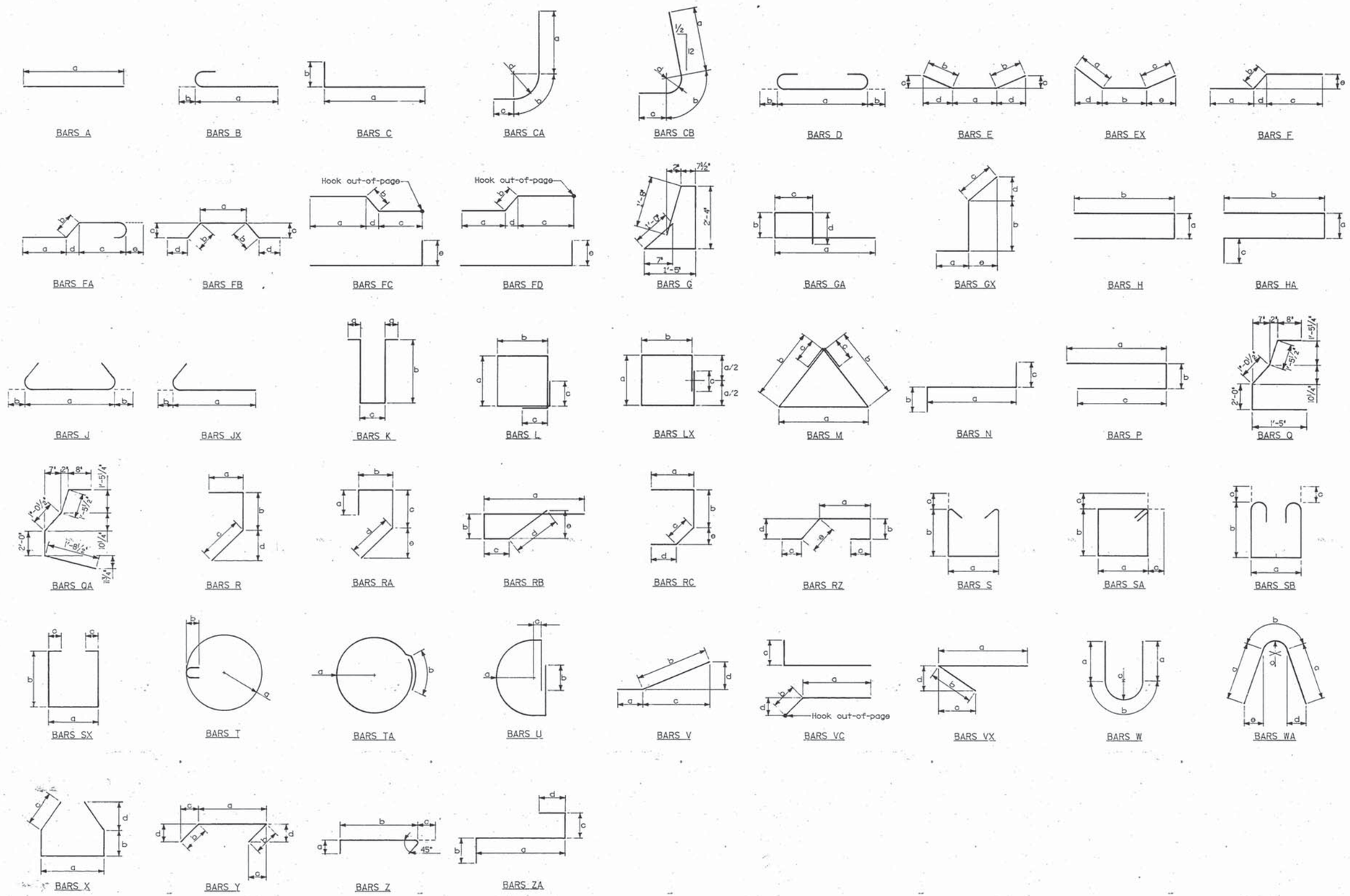

STATE OF TENNESSEE
DEPARTMENT OF TRANSPORTATION
BUREAU OF HIGHWAYS

REINFORCING STEEL BAR BENDING DETAILS

I-40 OVER
CANEY FORK RIVER
STA. 518+49.00
℄ SURVEY E.B. & W.B. I-40
SMITH COUNTY
1989

CORRECT _____
ENGINEER OF STRUCTURES

APPROVED _____
DIRECTOR OF HIGHWAYS

M-214-167

DESIGNED BY	W. S. HUFFSTETLER	DATE	1-89
DRAWN BY	EAB	DATE	1-89
SUPERVISED BY	W. S. HUFFSTETLER	DATE	1-89
CHECKED BY	DWT	DATE	2-89

FED. ROAD DIST. No.	TENN	FEDERAL AID PROJECT No.	FISCAL YEAR	SHEET No.	TOTAL SHEETS
3		I-40-5(3) 264		53	372

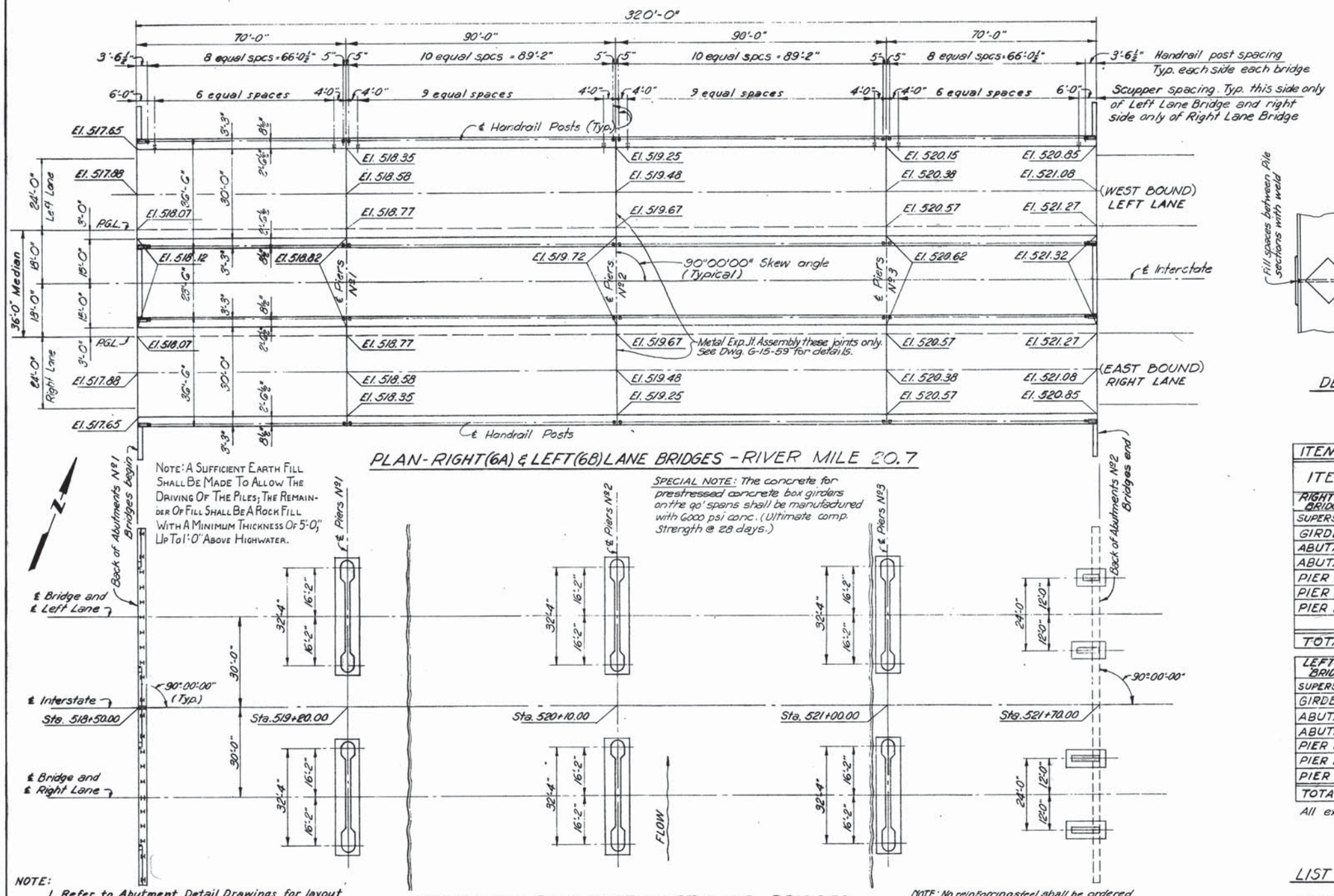

PLAN-RIGHT(6A) & LEFT(6B) LANE BRIDGES - RIVER MILE 20.7

NOTE: A SUFFICIENT EARTH FILL SHALL BE MADE TO ALLOW THE DRIVING OF THE PILES; THE REMAINDER OF FILL SHALL BE A ROCK FILL WITH A MINIMUM THICKNESS OF 5'-0" UP TO 1'-0" ABOVE HIGHWATER.

SPECIAL NOTE: The concrete for prestressed concrete box girders on the 90' spans shall be manufactured with 6000 psi conc. (Ultimate comp. Strength @ 28 days.)

NOTE:
1. Refer to Abutment Detail Drawings for layout of piles.

FOUNDATION PLAN-RIGHT & LEFT LANE BRIDGES

NOTE: No reinforcing steel shall be ordered for the Abutments No.2 until the Rock foundation has been determined

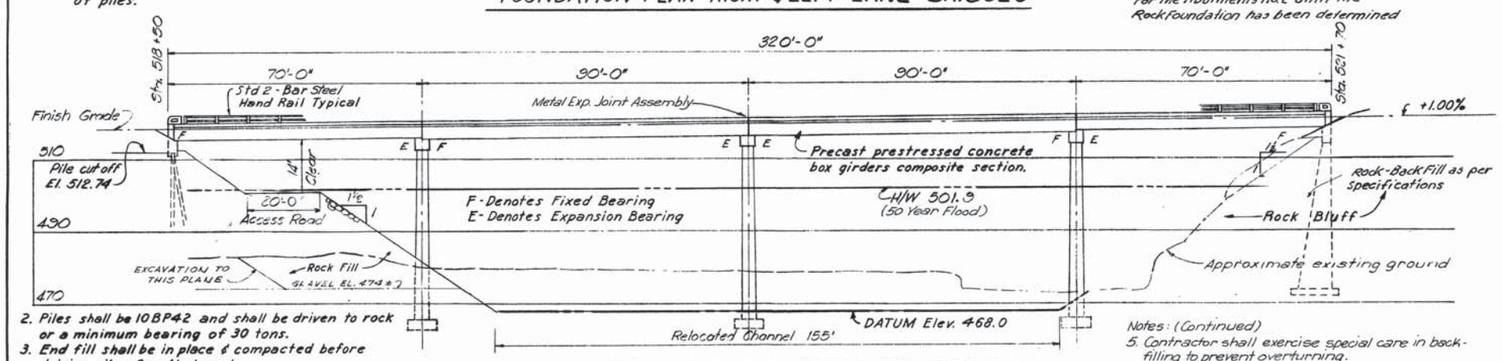

2. Piles shall be 10BP42 and shall be driven to rock or a minimum bearing of 30 tons.
3. End fill shall be in place & compacted before driving piles for Abutments.
4. Pier footings shall set a minimum of 1'-0" into sound rock.

ELEVATION - RIGHT & LEFT LANE BRIDGES

Notes: (Continued)
5. Contractor shall exercise special care in back-filling to prevent overturning.

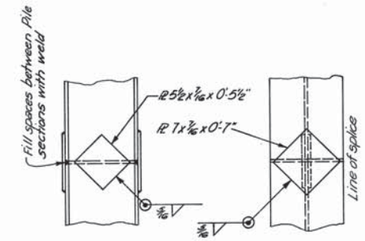

DETAIL OF PILE SPLICE

GENERAL NOTES:

GENERAL SPECIFICATIONS: Standard Road and Bridge Specification of the Tennessee Department of Highways and Public Works.
DESIGN SPECIFICATIONS: Standard Specifications for Highway Bridges AASHO 1957 and tentative AASHO Specifications covering prestressed concrete design and construction (with subsequent revisions.)
DESIGN LOADING: HS0-S16-44 and for alternate loading as per Section 4C of PPM 20-4.
CONCRETE: All concrete shall be Class A and shall be air entrained.
REINFORCING STEEL: See Specifications.
FORMS and FINISH: See Specifications.
HAND RAILS: Standard 2-bar Steel Hand-railing, Tennessee Highway Department Standard.
PRECAST PRESTRESSED CONCRETE GIRDERS: See special provisions.
BEARING PADS: See special provisions.

ESTIMATED QUANTITIES

ITEM NO.	17-3	17-2	17-4	135-4	135-12	702	137-3	154-1H	154-1J	132-1	
ITEMS	EXCAVATION			CONC. CLASS A	REINF. STEEL	2-BAR STEEL HANDRAIL	10BP42 BEARING PILES	PRECAST PRESTRESSED BOX GIRDERS 48" WIDE 44"x33" L=89'-11½"	44"x44" L=89'-10½"	STRUCT. STEEL	
	WET	DRY	ROCK								
RIGHT LANE BRIDGE 6A	Cu. Yds.			Cu. Yds.	Lbs.	Lin. Ft.	Lin. Ft.	Each	Each	Lbs.	
SUPERSTRUCTURE				193.1	31,495	626				1470	
GIRDERS				–				16	16		
ABUTMENT #1				19.5	2672		570				
ABUTMENT #2		126	299	72.0	16,246						
PIER NO. 1	114	200	23	173.1	14,303						
PIER NO. 2	129		16	174.8	14,308						
PIER NO. 3	93		31	174.8	14,399						
TOTALS	336	326	369	807.3	99,423	626	570	16	16	1470	
LEFT LANE BRIDGE 6B											
SUPERSTRUCTURE				193.1	31,495	626				1470	
GIRDERS								16	16		
ABUTMENT #1				19.5	2672		570				
ABUTMENT #2		75	198	50.3	11,058						
PIER NO. 1	114	200	23	173.1	14,303						
PIER NO. 2	129		16	174.8	14,308						
PIER NO. 3	93		31	174.8	14,399						
TOTALS	336	275	268	785.6	94,235	626	570	16	16	1470	

All expansion joint material shall be included in the unit price bid for Class "A" conc.

HYDRAULIC DESIGN DATA

High Water Elevation	501.9
Design Discharge	Q = 39,200 cfs
Design Velocity	V = 6 fps
Opening Required	Ar = 6550 sq. ft.
Opening Furnished	Ar = 7000 sq. ft.

LIST OF DRAWINGS

	DWG. Nº.
LAYOUT OF BRIDGES	G-15-127
LAYOUT AND LOG OF CORE BORINGS	G-15-128
ABUTMENT Nº1 RIGHT & LEFT LANES	G-15-129
ABUTMENT Nº2 RIGHT LANE	G-15-130
ABUTMENT Nº2 LEFT LANE	G-15-131
PIERS Nº 1 & 3	G-15-132
PIER Nº 2	G-15-133
BOX GIRDER LAYOUT & DETAIL	G-15-134
SLAB AND SAFETY CURBS	G-15-135
REINFORCING STEEL SCHEDULE Nº1	G-15-136
REINFORCING STEEL SCHEDULE Nº2	G-15-137
STEEL HANDRAILING	G-10-99

2-30' Roadways with Safety curbs
SMITH COUNTY

Scale: 1" = 20'

MID-SOUTH ENGINEERING CO., INC.
820 BROADWAY, N. E. KNOXVILLE, TENNESSEE

BRIDGES OVER CANEY FORK RIVER - RIVER MILE 20.7
STA 518+50 RIGHT (6A) AND LEFT (6B) LANES

LAYOUT OF BRIDGES

STATE OF TENNESSEE
DEPARTMENT OF HIGHWAYS AND PUBLIC WORKS
NASHVILLE

DR.: K.G.
CHK'D. H.R.
APP'D. H.R.
DATE 11-16-59

G-15-127

Rev. 4-26-60
REV. 4-18-60

FED. ROAD DIST. No.	T E N N	FEDERAL AID PROJECT No.	FISCAL YEAR	SHEET No.	TOTAL SHEETS
3		I-40-5(5) 264		136	372

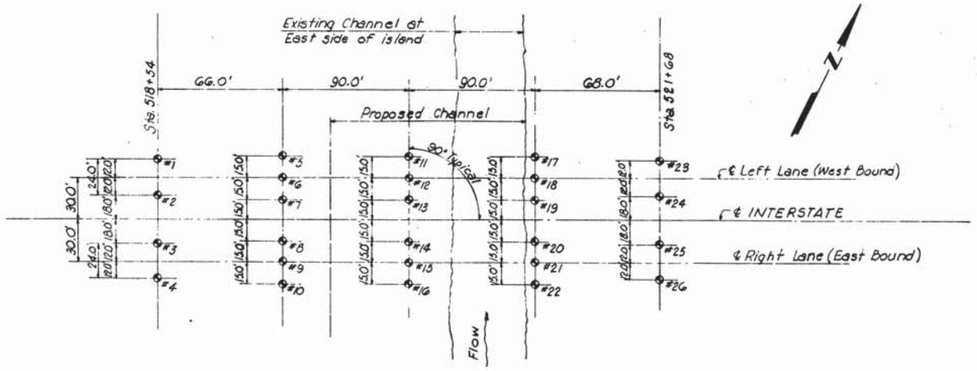

PLAN- CORE DRILLING LAYOUT
(RIVER MILE 20.7)

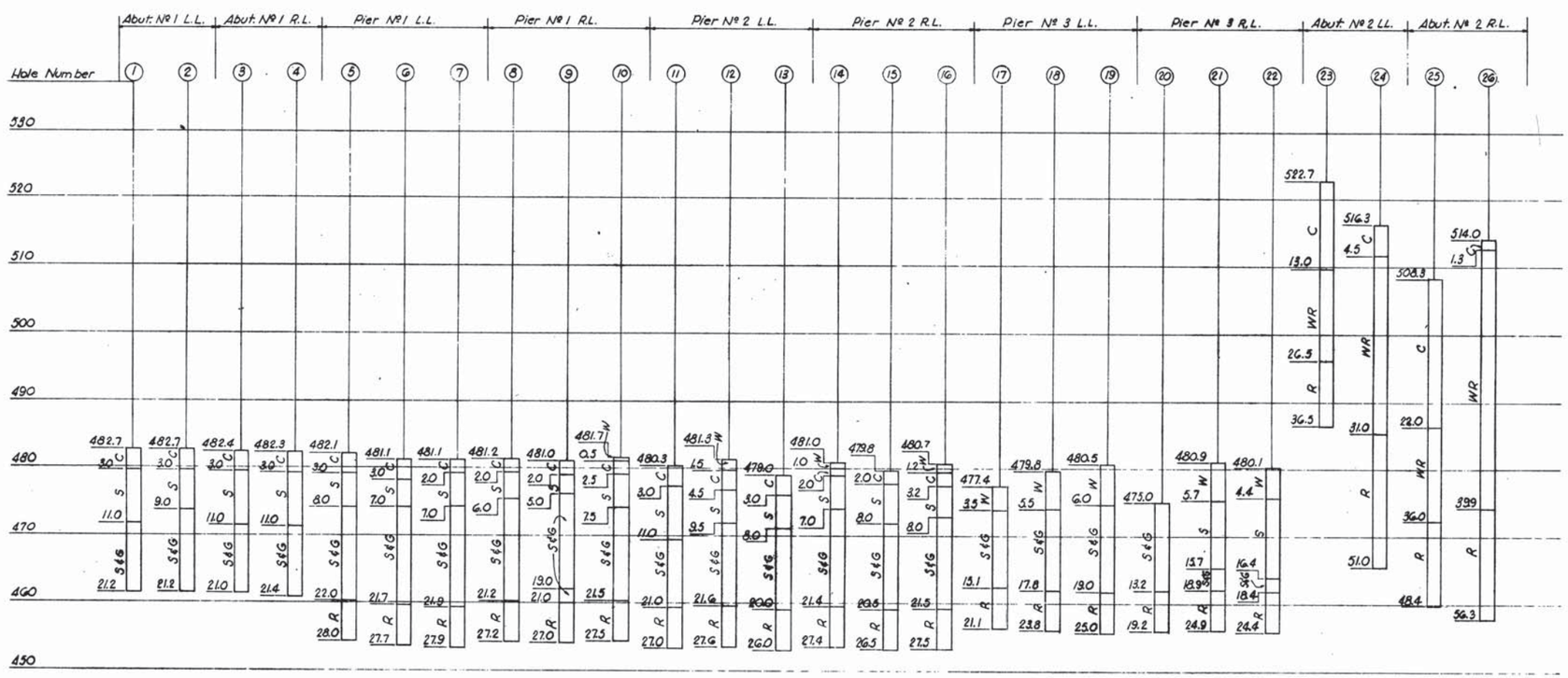

LOG OF CORE BORINGS

LEGEND

W____Water
C____Clay and Silt
S____Sand
S&G__Sand and Gravel
WR__Weathered Rock
R____Rock (Limestone)
B____Boulders

NOTE: Water elevation in Caney Fork River fluctuates depending on discharge at Center Hill Dam.

MID-SOUTH ENGINEERING CO., INC.
820 BROADWAY, N. E. KNOXVILLE, TENNESSEE

BRIDGES OVER CANEY FORK RIVER - RIVER MILE 20.7
STA 518+50 RIGHT (6A) AND LEFT (6B) LANES

LAYOUT & LOG OF CORE BORINGS

STATE OF TENNESSEE
DEPARTMENT OF HIGHWAYS AND PUBLIC WORKS
NASHVILLE

DR. W.R.S.
CH'KD. W.R.
APP'D. W.R.
DATE 11-16-59

G-15-128

FED. ROAD DIST. No.	T E N N	FEDERAL AID PROJECT No.	FISCAL YEAR	SHEET No.	TOTAL SHEETS
3		I-40-5(9)264		137	372

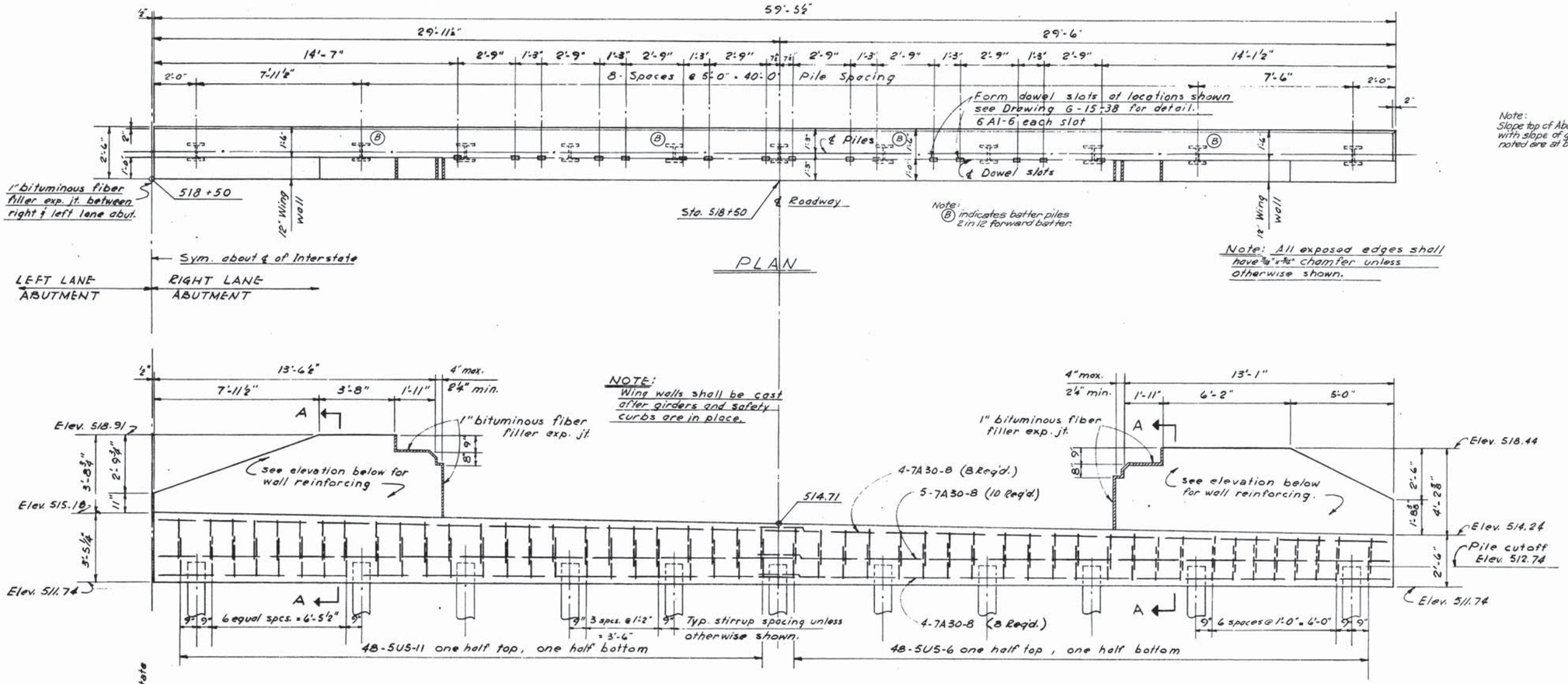

Note: Slope top of Abutment cap to conform with slope of girders. Elevations noted are at back of Abutment.

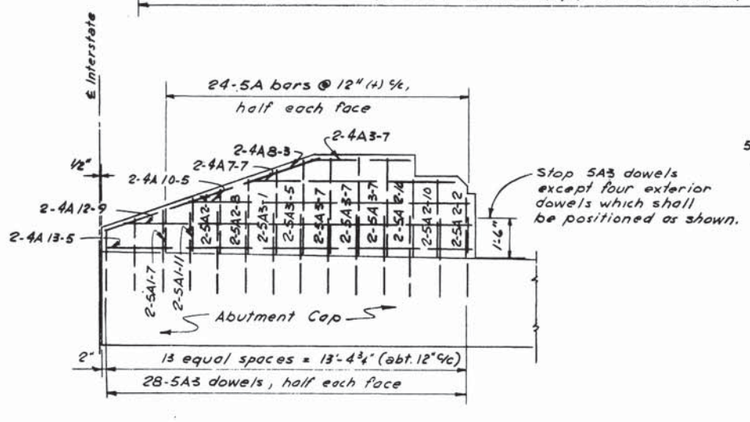

ELEVATION - INTERIOR WING WALLS

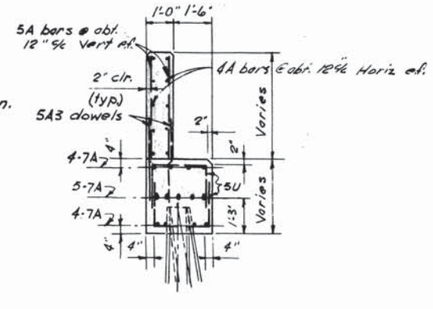

SECTION A-A

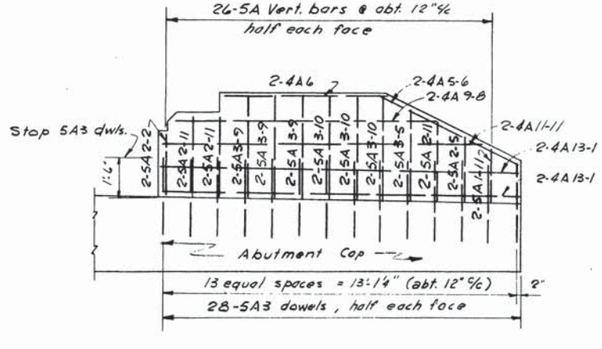

ELEVATION - EXTERIOR WING WALLS

ESTIMATED QUANTITIES

		ABUT. No. 1 RIGHT LANE	ABUT. No. 1 LEFT LANE
Class "A" Concrete	Cu. Yds.	19.5	19.5
Reinforcing Steel	Lbs.	2672	2672

Scale ⅜" = 1'-0"

MID-SOUTH ENGINEERING CO., INC.
820 BROADWAY, N. E. KNOXVILLE, TENNESSEE

BRIDGES OVER CANEY FORK RIVER - RIVER MILE 20.7
STA. 518+50 RIGHT (6A) & LEFT (6B) LANES

ABUTMENT NO. 1
RIGHT & LEFT LANE

STATE OF TENNESSEE
DEPARTMENT OF HIGHWAYS
AND PUBLIC WORKS
NASHVILLE

		DATE	
DR.	L.E.S.		G-15-129
CHK'D.	R.A.H.		
APP'D.	W.R.	11-16-59	

FED. ROAD DIST. No.	STATE	FEDERAL AID PROJECT No.	FISCAL YEAR	SHEET No.	TOTAL SHEETS
3	TENN	I-40-5(9)264		138	[redacted] 372

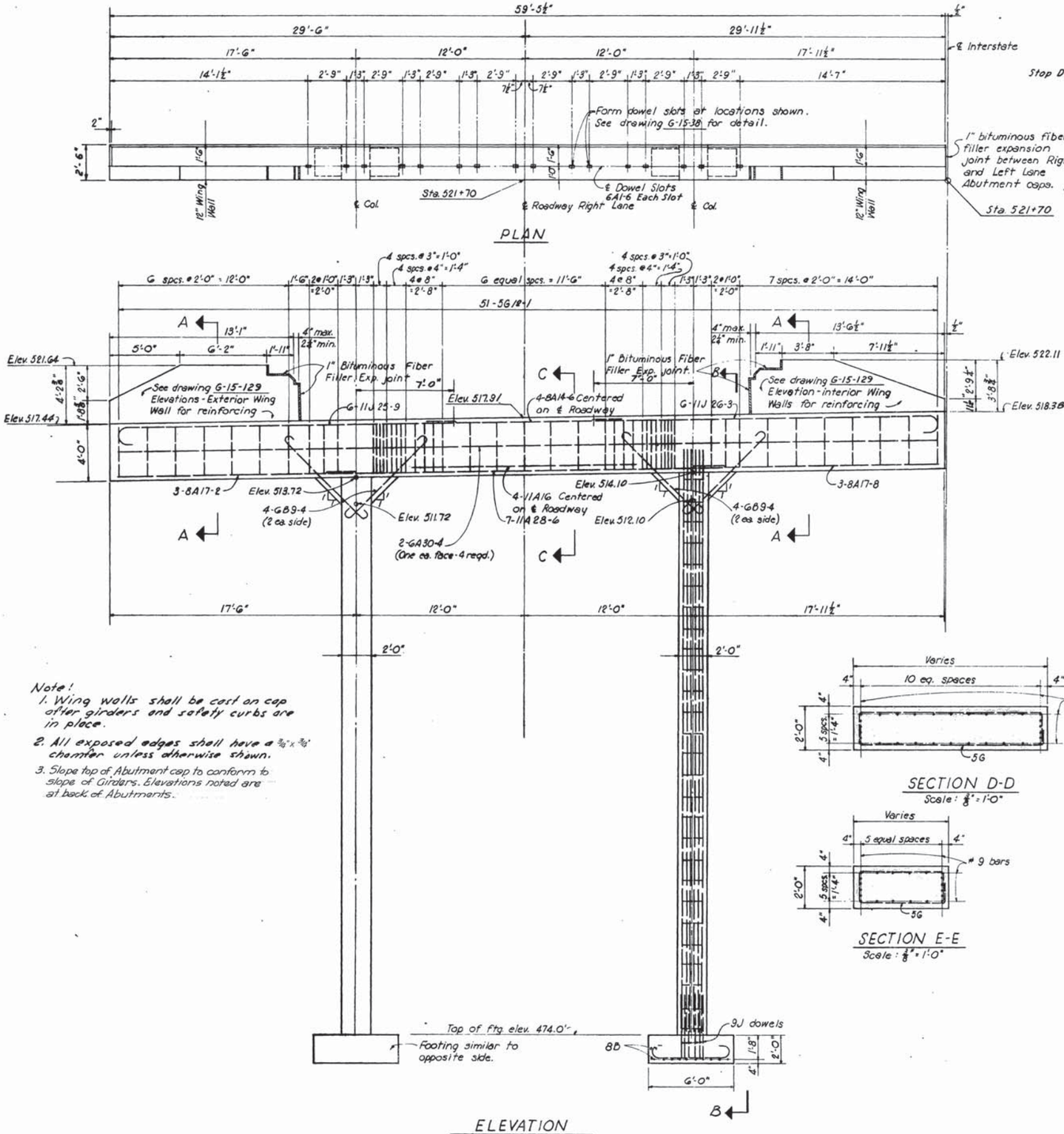

Note:
1. Wing walls shall be cast on cap after girders and safety curbs are in place.
2. All exposed edges shall have a 3/4" x 3/4" chamfer unless otherwise shown.
3. Slope top of Abutment cap to conform to slope of Girders. Elevations noted are at back of Abutments.

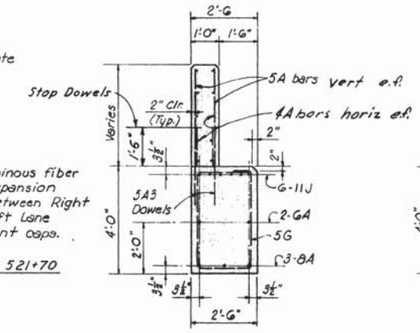

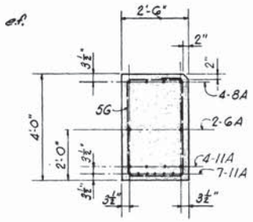

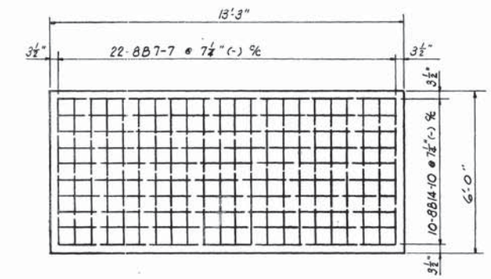

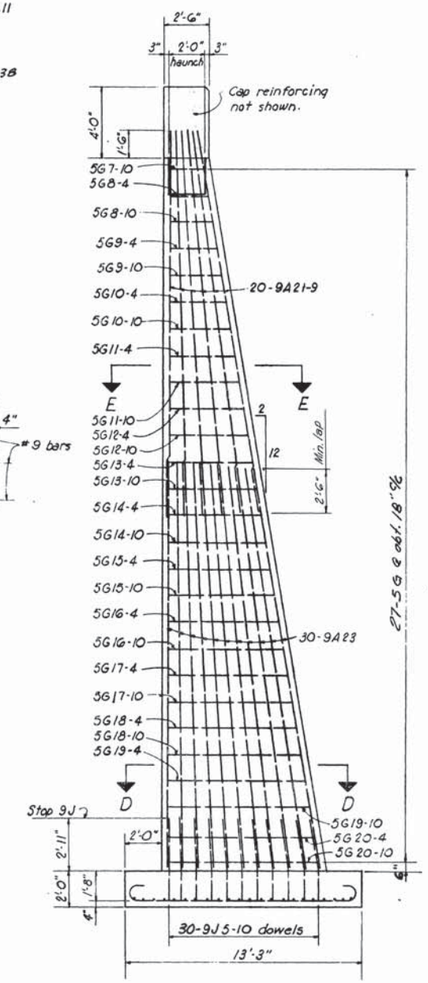

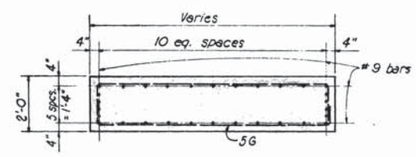

ESTIMATED QUANTITIES

Class "A" Concrete - Cu. Yds.	72.0
Reinforcing Steel - Lbs.	16,246

Scale: 1/4" = 1'-0" Unless otherwise shown

MID-SOUTH ENGINEERING CO., INC.
820 BROADWAY, N. E. KNOXVILLE, TENNESSEE

BRIDGES OVER CANEY FORK RIVER - RIVER MILE 20.7
STA. 518+50 RIGHT (6A) AND LEFT (6B) LANES

ABUTMENT NO. 2
RIGHT LANE

STATE OF TENNESSEE
DEPARTMENT OF HIGHWAYS
AND PUBLIC WORKS
NASHVILLE

		DATE	
DR. W.R.S.			G-15-130
CHK'D. R.A.H.		11-16-59	
APP'D. W.R.			

FED. ROAD DIST. No.	STATE	FEDERAL AID PROJECT No.	FISCAL YEAR	SHEET No.	TOTAL SHEETS
3	TENN	I-40-3(9)264		139	372

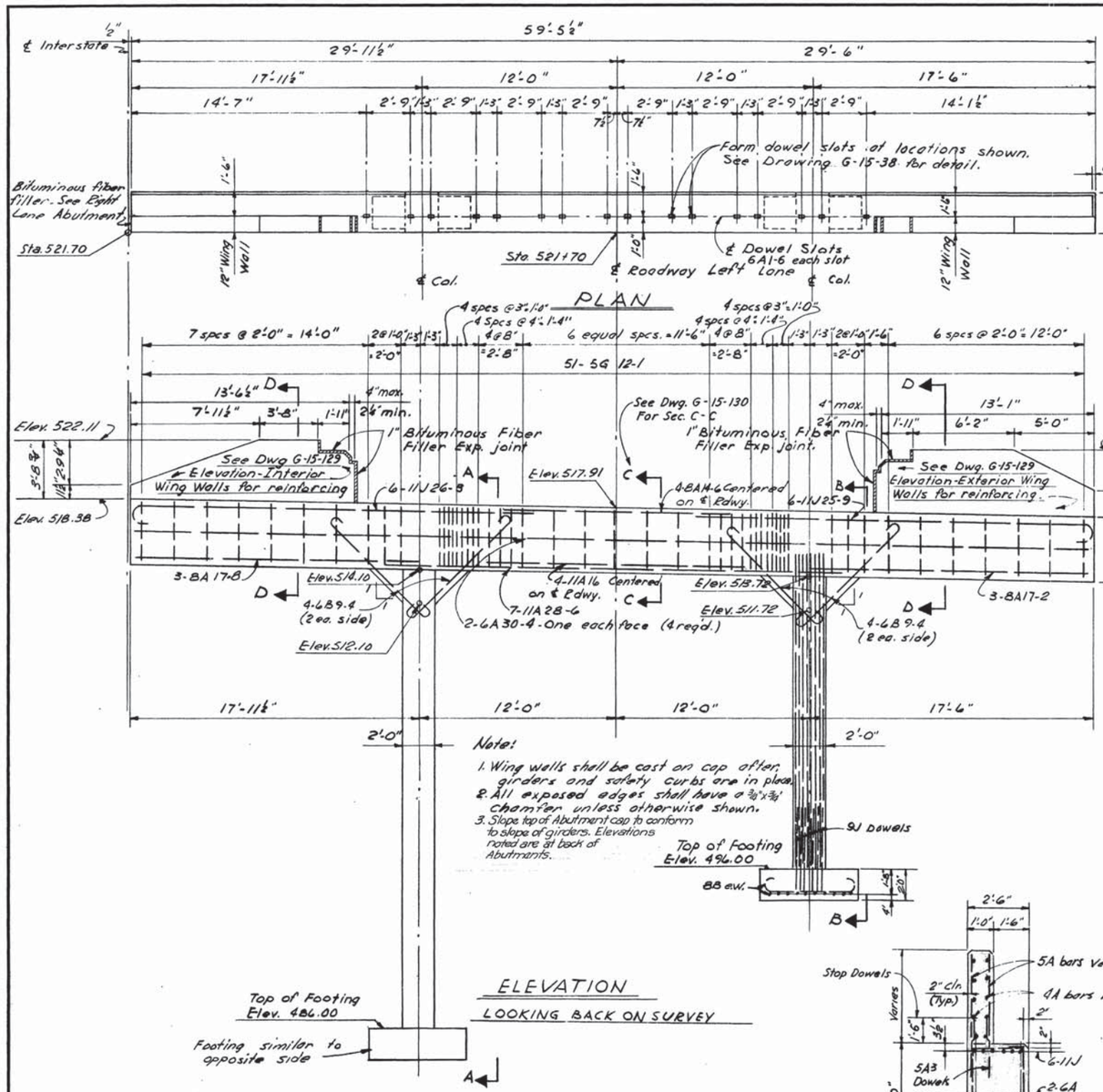

ELEVATION

LOOKING BACK ON SURVEY

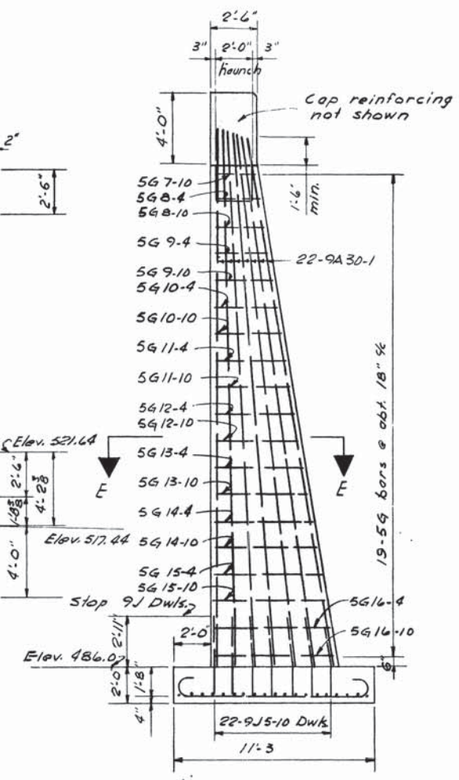

SECTION A-A

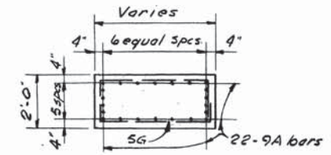

SECTION E-E

scale ⅛"=1'-0"

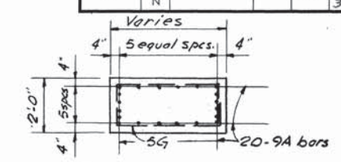

SECTION F-F

scale ⅛"=1'-0"

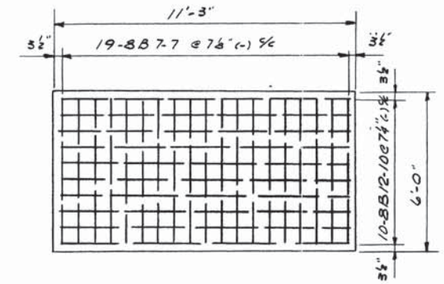

PLAN - FOOTING REINFORCING

FOR COLUMN SHOWN SECTION A-A

scale ⅛"=1'-0"

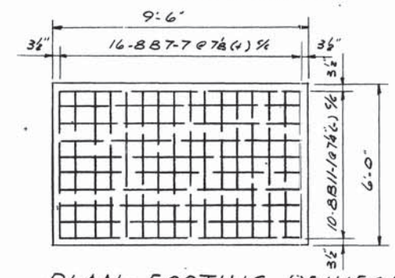

PLAN - FOOTING REINFORCING

FOR COLUMN SHOWN SECTION B-B

scale ⅛"=1'-0"

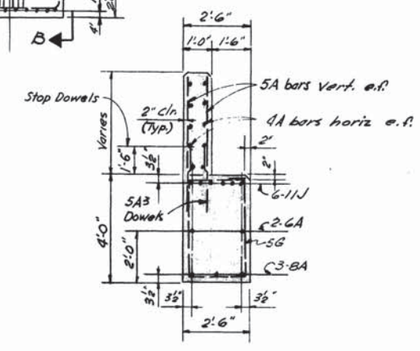

SECTION D-D

Scale ⅛"=1'-0"

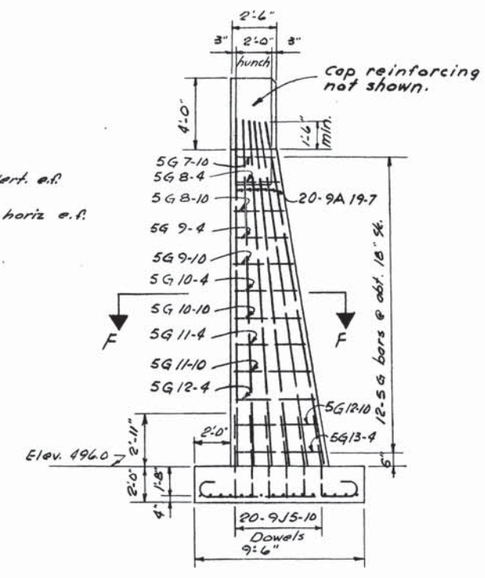

SECTION B-B

ESTIMATED QUANTITIES

Class "A" Concrete	Cu. Yds.	50.3
Reinforcing Steel	Lbs.	11,058

Scale: ¼"=1'-0" Unless otherwise shown.

MID-SOUTH ENGINEERING CO., INC.
820 BROADWAY, N. E. KNOXVILLE, TENNESSEE

BRIDGES OVER CANEY FORK RIVER-RIVER MILE 20.7
STA. 518+50 RIGHT (GA) LEFT (GB) LANES

ABUTMENT NO. 2 LEFT LANE

STATE OF TENNESSEE
DEPARTMENT OF HIGHWAYS
AND PUBLIC WORKS
NASHVILLE

DR. L.E.S.
CHK'D. R.A.H.
APP'D. W.R.
DATE 11-16-59

G-15-131

FED. ROAD DIST. No.	STATE	FEDERAL AID PROJECT No.	FISCAL YEAR	SHEET No.	TOTAL SHEETS
3	TENN	I-40-5(9)264		140	372

Note: Top of Piers shall slope to conform to slope of girders. Elevations noted are at ℄ of piers.

ESTIMATED QUANTITIES

	Rt. Lane Pier #1	Rt. Lane Pier #3	Lt. Lane Pier #1	Lt. Lane Pier #3
Class "A" Conc. - Cu. Yds.	173.1	174.8	173.1	174.8
Reinf. Steel - Lbs.	14,303	14,399	14,303	14,399

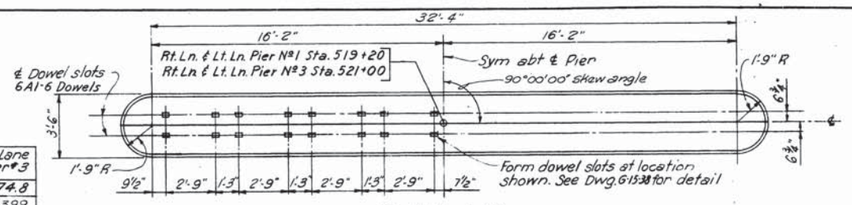

PLAN - CAP
Scale ¼" = 1'-0"

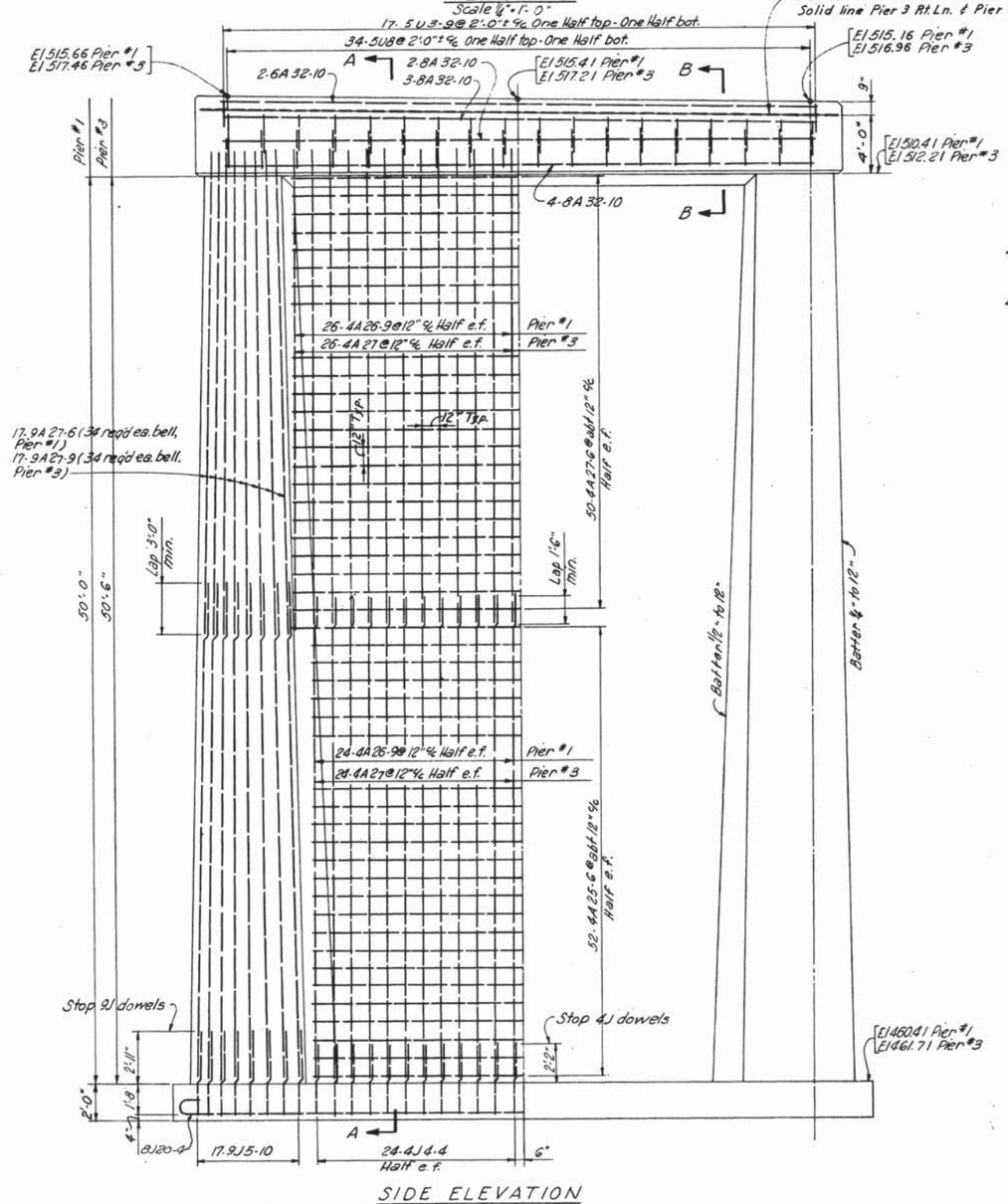

SIDE ELEVATION
RT. LN. PIER #1 AND PIER #3 - AS SHOWN - LOOKING FORWARD ON SURVEY
LT. LN. PIER #3 AND PIER #1 - LOOKING BACK ON SURVEY
Scale ¼" = 1'-0"

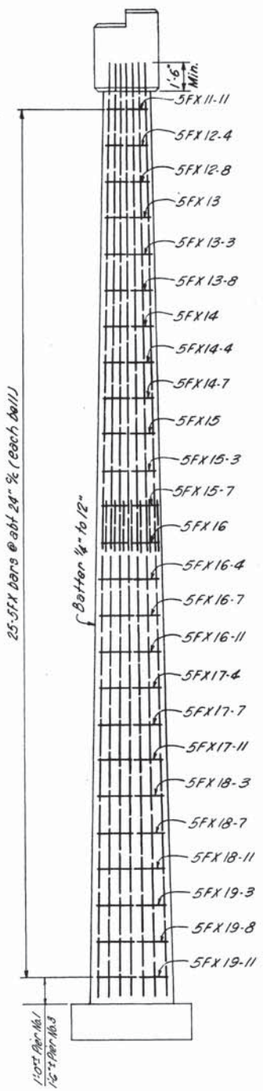

END ELEVATION
Scale ¼" = 1'-0"

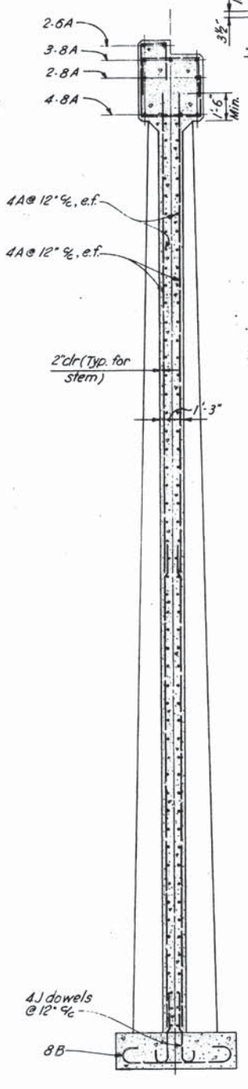

SECTION A-A THRU PIER
Scale ¼" = 1'-0"

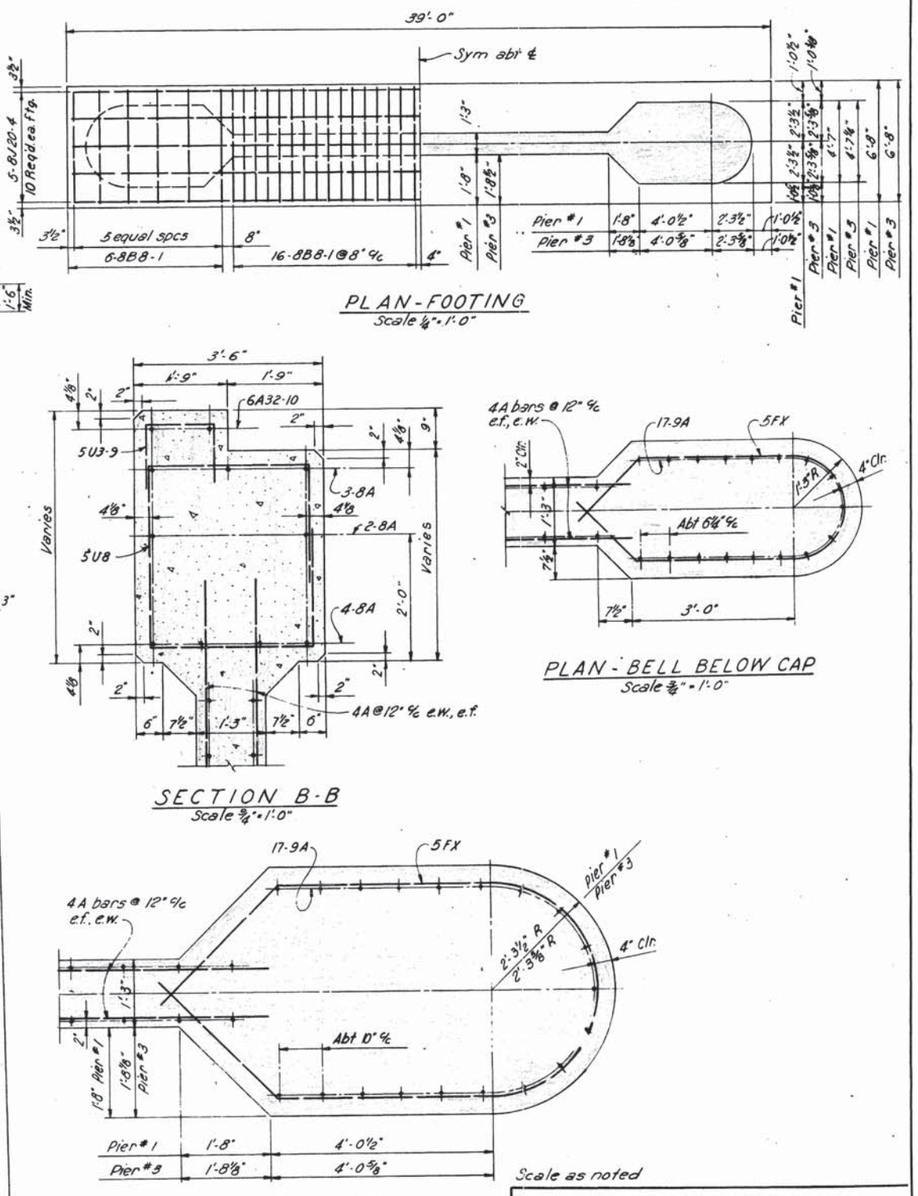

PLAN - FOOTING
Scale ¼" = 1'-0"

SECTION B-B
Scale ¾" = 1'-0"

PLAN - BELL BELOW CAP
Scale ¾" = 1'-0"

PLAN - BELL AT FOOTING
Scale ¾" = 1'-0"

Note: Placing designation as follows:
e.f. - each face
e.w. - each way

Scale as noted

MID-SOUTH ENGINEERING CO., INC.
820 BROADWAY, N. E. KNOXVILLE, TENNESSEE

BRIDGES OVER CANEY FORK RIVER - RIVER MILE 20.7
STA. 518+50 RIGHT (6A) & LEFT (6B) LANES

PIERS Nos 1 & 3
LT. & RT. LANES

STATE OF TENNESSEE
DEPARTMENT OF HIGHWAYS AND PUBLIC WORKS
NASHVILLE

		DATE
DR.	R.W.P.	
CHK'D	R.A.H.	
APP'D	W.R.	11-16-59

G-15-132

Rev. 8-22-60

FED. ROAD DIST. No.	TENN	FEDERAL AID PROJECT No.	FISCAL YEAR	SHEET No.	TOTAL SHEETS
3		I-40-5(9)264		141	372

Note: Top of piers shall slope to conform to slope of girders. Elevations noted are at ℄ of piers.

ESTIMATED QUANTITIES

	Lt. Lane	Rt. Lane
Class "A" concrete Cu. Yds.	174.8	174.8
Reinforcing Steel Lbs.	14,308	14,308

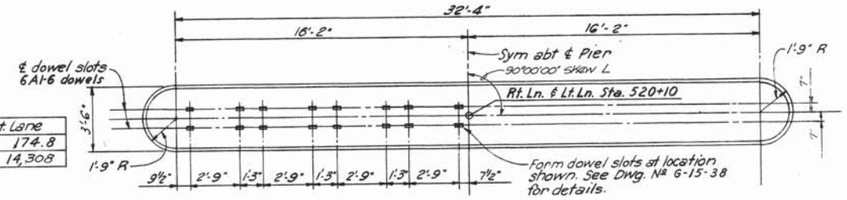

PLAN - CAP
Scale ¼" = 1'-0"

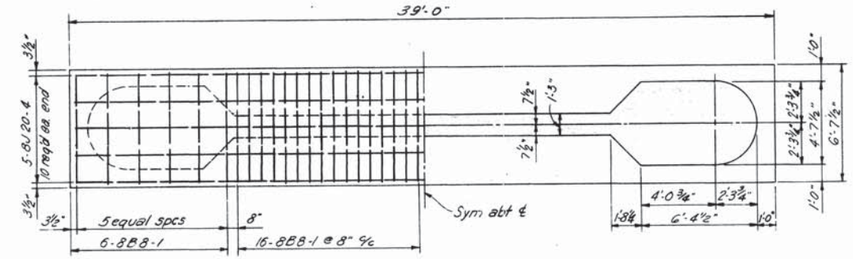

PLAN - FOOTING
Scale ¼" = 1'-0"

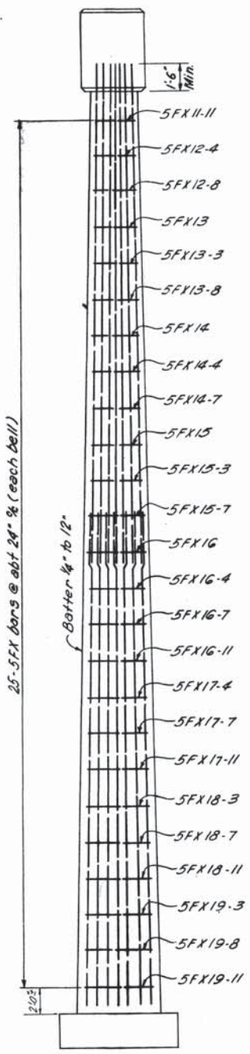

END ELEVATION
Scale ¼" = 1'-0"

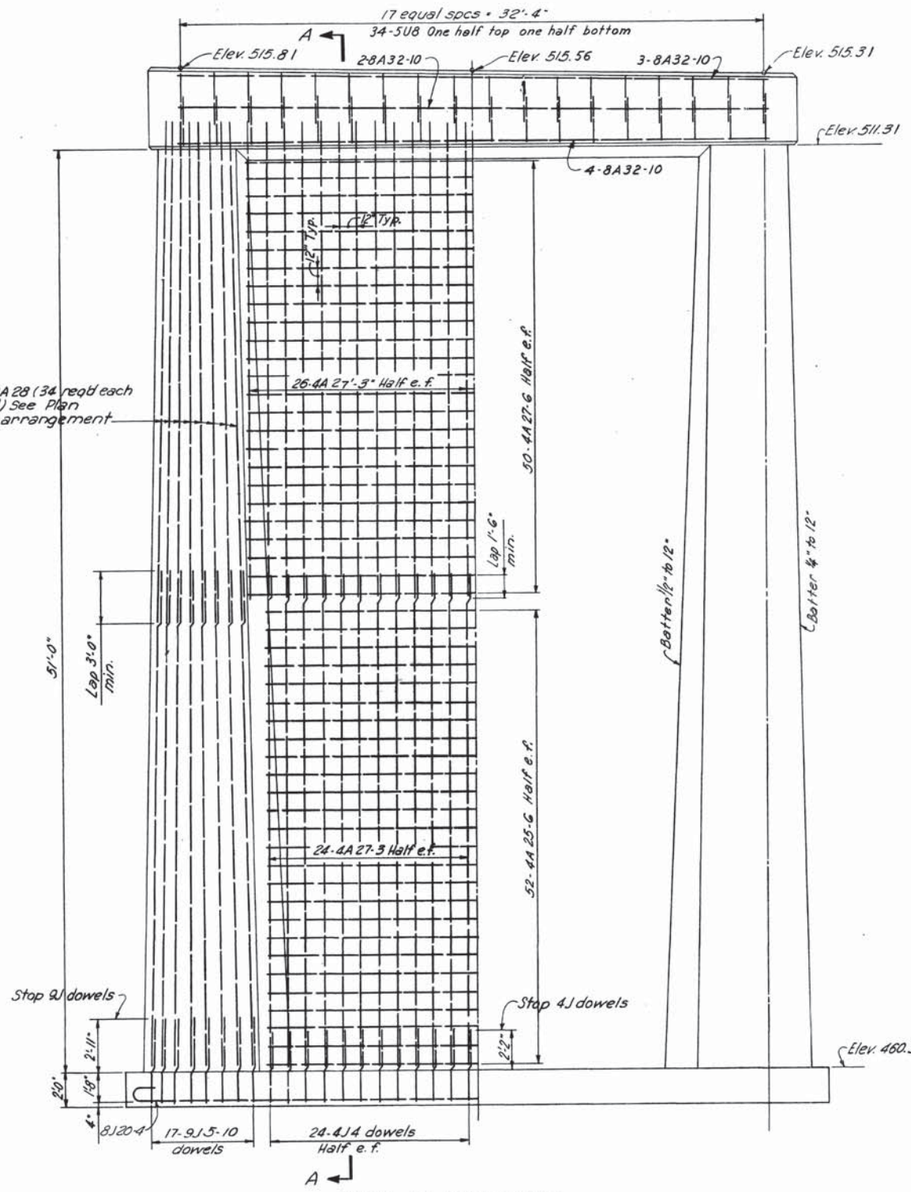

SIDE ELEVATION
PIER Nº 2 - RT. LANE - LOOKING FORWARD ON SURVEY
PIER Nº 2 - LT. LANE - LOOKING BACK ON SURVEY
Scale ¼" = 1'-0"

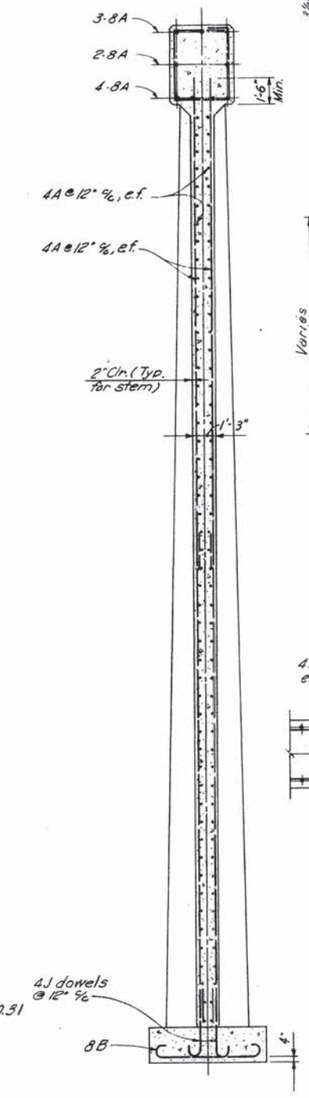

SECTION A-A THRU PIER
Scale ¼" = 1'-0"

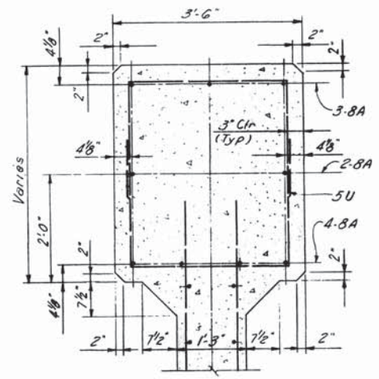

SECTION THRU CAP
Scale ¾" = 1'-0"

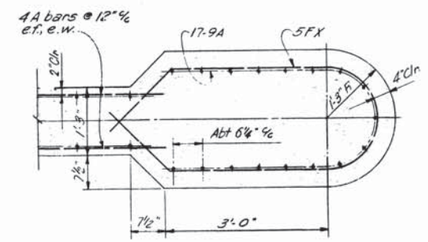

PLAN - BELL BELOW CAP
Scale ¾" = 1'-0"

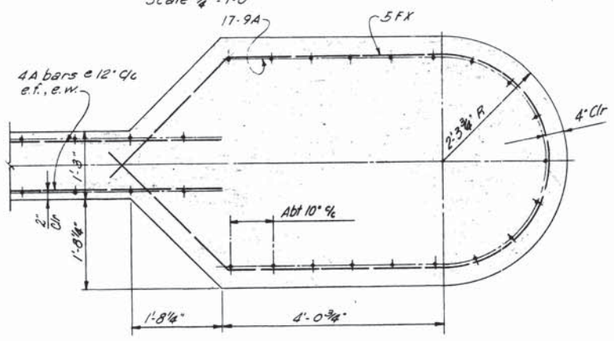

PLAN - BELL AT FOOTING
Scale ¾" = 1'-0"

Note: Placing designation as follows:
e.f. - each face
e.w. - each way

Scale as noted

MID-SOUTH ENGINEERING CO., INC.
820 BROADWAY, N. E. KNOXVILLE, TENNESSEE

BRIDGES OVER CANEY FORK RIVER - RIVER MILE 20.7
STA. 518+50 RIGHT (6A) & LEFT (6B) LANES

PIER Nº 2
LT. & RT. LANES

STATE OF TENNESSEE
DEPARTMENT OF HIGHWAYS AND PUBLIC WORKS
NASHVILLE

		DATE	
DR. R.W.R.			G-15-133
CHK'D. R.A.H.			
APP'D. W.R.		11-16-59	

Rev. 8-27-60
Revised 4-19-60 - D.B.M.

FED. ROAD DIST. No.	STATE	FEDERAL AID PROJECT No.	FISCAL YEAR	SHEET No.	TOTAL SHEETS
3	TENN	I-40-5(9)264		142	372

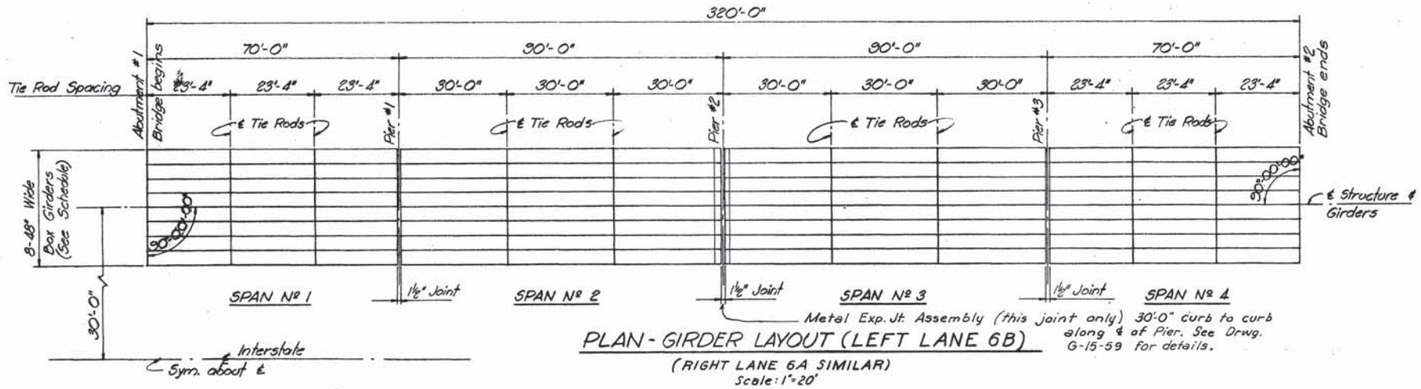

PLAN - GIRDER LAYOUT (LEFT LANE 6B)

(RIGHT LANE 6A SIMILAR)
Scale: 1"=20'

GIRDER SCHEDULE

SPAN NO.	BOX SIZE	OUT TO OUT LENGTH	PRESTRESSING STEEL AREA	PRESTRESSING STEEL Nº STRANDS	Nº 3/8" STRANDS PER ROW 1	2	3	4	5	6	7	"O"	"C"	WEIGHT (LBS) EACH GIRDER
Nº 1 & 4	48" x 39"	69'-11¼"	3.6754 □"	46	14	26	6					2.99"	11.28"	46,742
* Nº 2 & 3	48" x 42"	89'-10½"	4.9538 □"	62	18	22	6	4	4	4	4	4.34"	14.06"	68,008

* Concrete for girders for spans Nºs 2 & 3 (90') shall have f'c = 6000 psi, f'ci = 4800 psi } minimum

Pretensioning Steel: An initial force of 14000 Lbs shall be applied to each strand in all girders.

Totals: 32 - 69'-11¼" Girders
32 - 89'-10½" Girders

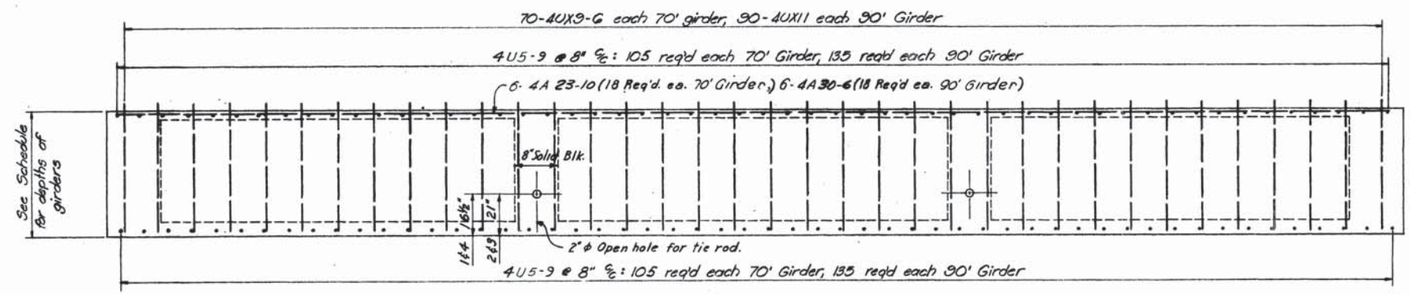

ELEVATION - BOX GIRDERS

SHOWING MILD STEEL REINFORCING: SEE SCHEDULE AND SECTIONS THIS DRAWING FOR NUMBER, SIZE, AND LOCATION OF HIGH TENSILE PRESTRESSING STEEL CABLES.

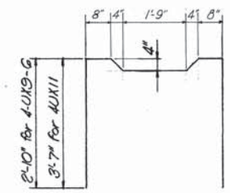

DETAIL 4UX9-G & 4UX11 BARS

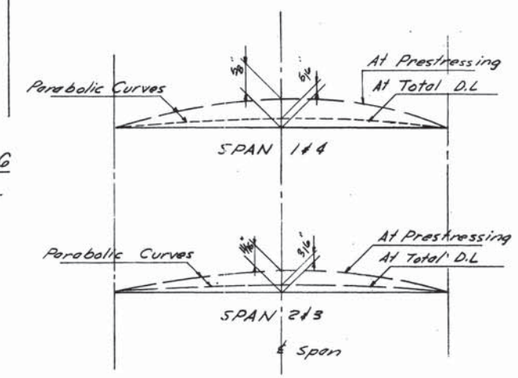

DEFLECTION DIAGRAMS

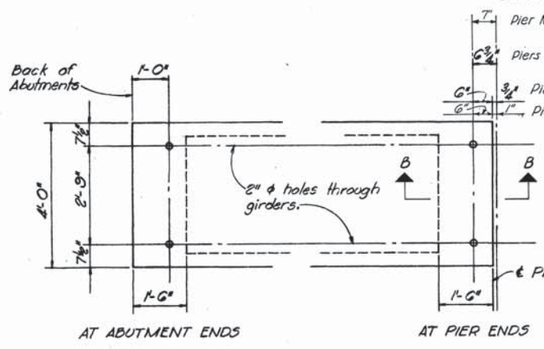

PART PLAN - BOX GIRDERS

Scale ½" = 1'-0"

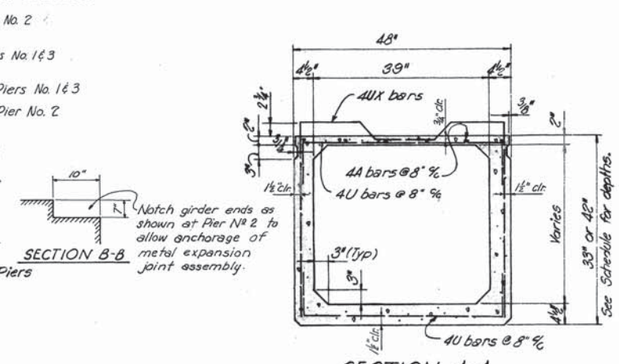

SECTION A-A

Scale: 3/8" = 1'-0"

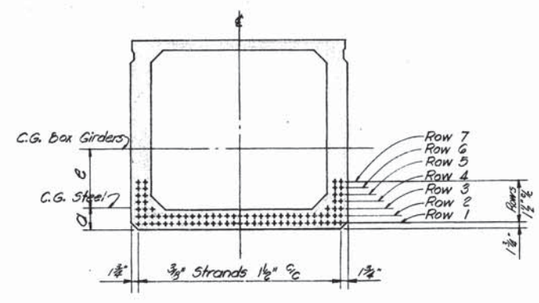

CABLE PATTERN

NOTE: Locate strands symmetrically about vertical ℄.

ESTIMATED QUANTITIES
BOX GIRDERS

5000 psi Concrete	Cu. Yds.	369.3
6000 psi Concrete	Cu. Yds.	537.3
Hi tensile reinforcing strands	Lbs.	79,043
Reinforcing Steel	Lbs.	115,856

Quantities for both bridges (6A) & (6B)

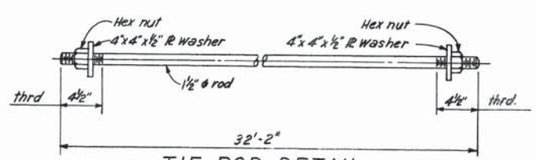

TIE ROD DETAIL

8 Req'd ea. bridge (Total 16)
Scale ½" = 1'-0"

Scale: As Noted.

MID-SOUTH ENGINEERING CO., INC.
820 BROADWAY, N. E. KNOXVILLE, TENNESSEE

BRIDGES OVER CANEY FORK RIVER - RIVER MILE 20.7
STA. 518+50 RIGHT (6A) & LEFT (6B) LANES

BOX GIRDERS LAYOUT AND DETAILS

STATE OF TENNESSEE
DEPARTMENT OF HIGHWAYS AND PUBLIC WORKS
NASHVILLE

DR. I.K.G.	DATE	G-15-134
CHK'D R.A.H.		
APP'D W.R.	11-16-59	

REVISED 4-19-60 - D.B.M.

FED. ROAD DIST No	TENN	FEDERAL AID PROJECT No	Fy. YEAR	
3		I-40-5(9)264	143	37

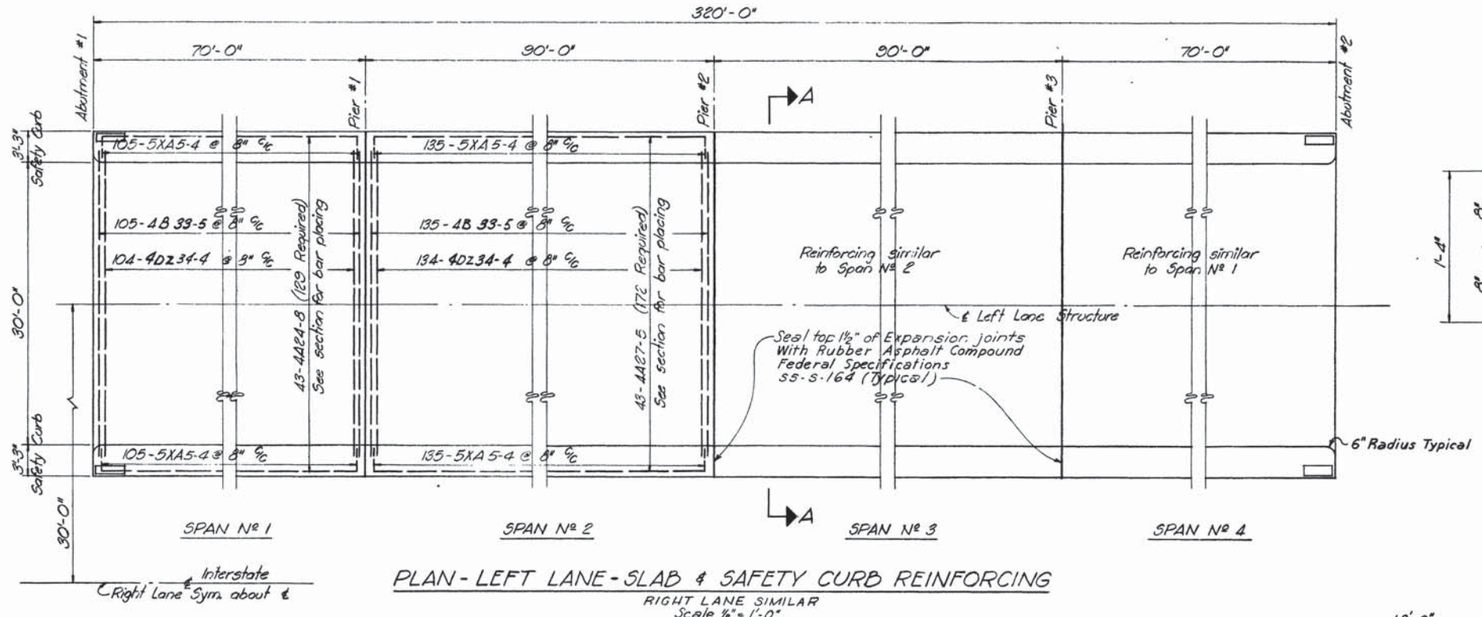

PLAN - LEFT LANE - SLAB & SAFETY CURB REINFORCING

RIGHT LANE SIMILAR
Scale ⅛" = 1'-0"

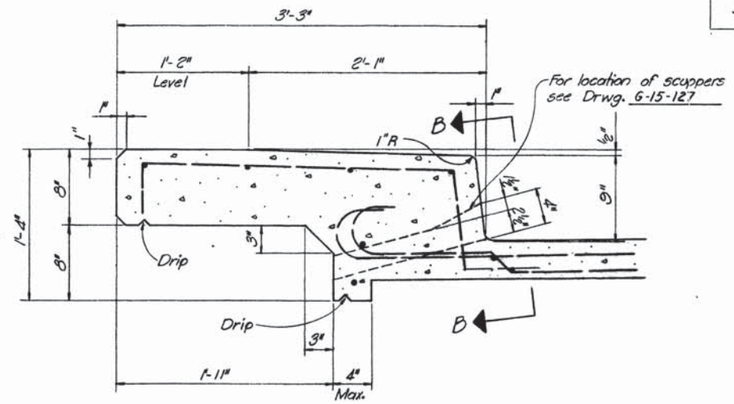

DETAIL OF SAFETY CURB & SCUPPER

Scale: 1½" = 1'-0"

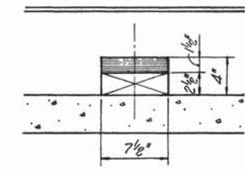

SECTION B-B

Showing scupper inlet opening
Scale 1½" = 1'-0"

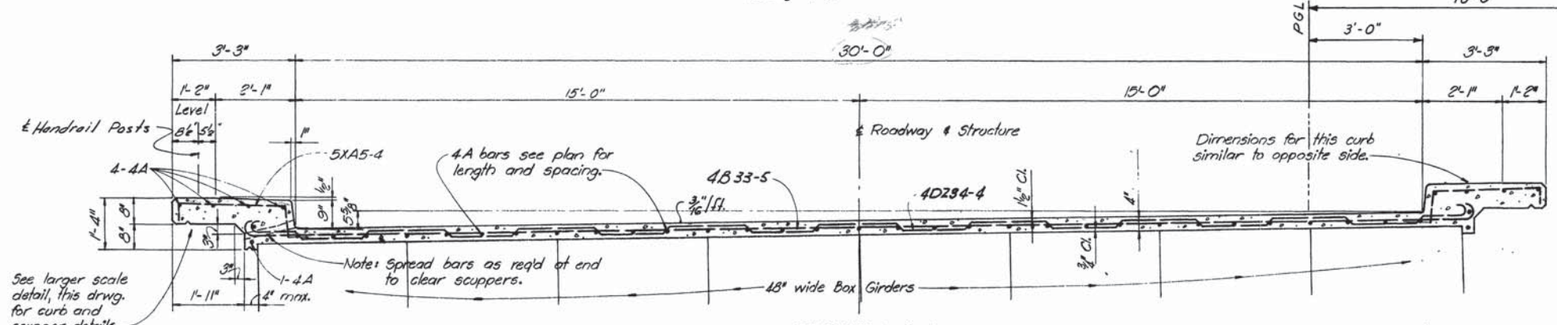

SECTION A-A

Scale: ½" = 1'-0"

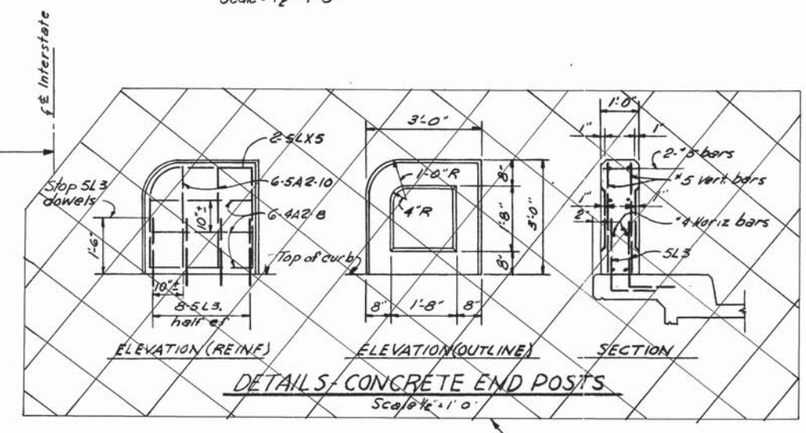

"VOID"
See Dwg. G 15-42 for new detail

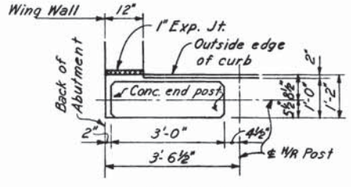

LOCATION PLAN
CONCRETE END POST

Scale ½" = 1'-0"

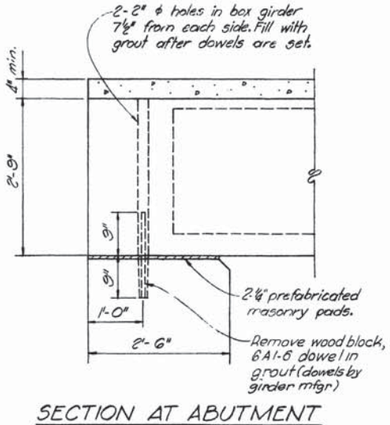

SECTION AT ABUTMENT

Scale: ¾" = 1'-0"

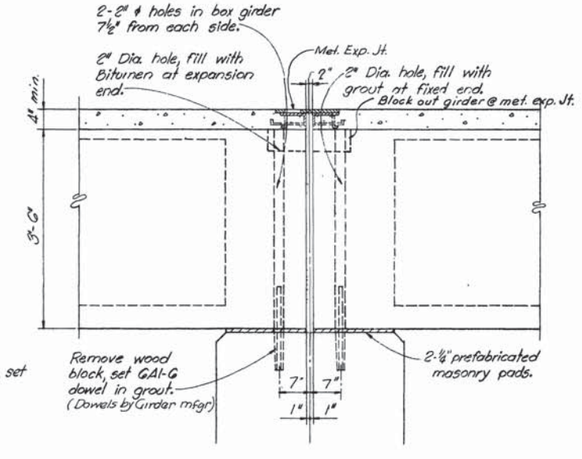

SECTION AT PIER #2

Scale: ¾" = 1'-0"

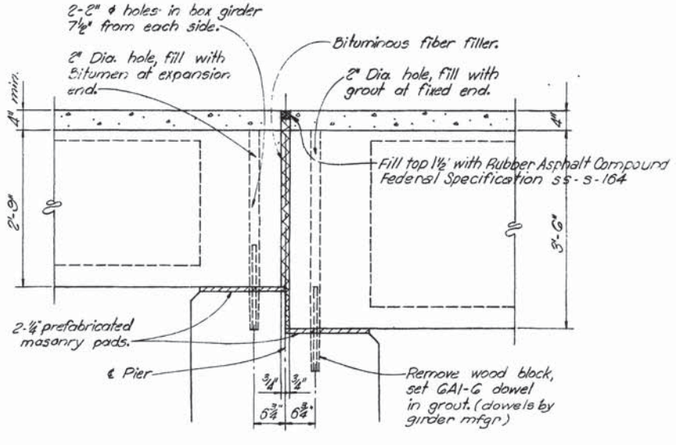

SECTION AT PIER #1 - AS SHOWN
SECTION AT PIER #3 - OPPOSITE

Scale: ¾" = 1'-0"

ESTIMATED QUANTITIES

		6A	6
Class "A" Concrete	Cu Yds	193.1	15
Reinforcing Steel	Lbs.	37,495	37,4

Scale: As Noted.

MID-SOUTH ENGINEERING CO., INC.
820 BROADWAY, N. E. KNOXVILLE, TENNESSEE

BRIDGES OVER CANEY FORK RIVER - RIVER MIL
STA. 518+50 - RIGHT (6A) & LEFT (6B) LANE
SLAB & SAFETY GU
LAYOUT AND DETAI

STATE OF TENNESSEE
DEPARTMENT OF HIGHWAYS
AND PUBLIC WORKS
NASHVILLE

	DATE	
DR. K.S.		G-15-13
CHK'D. R.A.H		
APP'D. W.R.	11-16-59	

REV. 4-19-60

ITEM: PROJECT: PAGE ____ OF ____

LOCATION	BAR MARK	NO. REQD	a	b	c	e	f	g	h	o	r	WEIGHT
	ABUTMENTS Nº1 RIGHT LANES											
	(6 bars for each abutment)											
	7A30-B	52										3260
	5A3-10	12										48
	5A3-9	12										47
	5A3-7	12										45
	5A3-5	8										29
	5A3-1	4										13
	5A3	112										350
	5A2-11	12										37
	5A2-10	8										24
	5A2-8	4										11
	5A2-5	4										10
	5A2-4	4										10
	5A2-2	8										18
	5A1-11	8										16
	5A1-7	4										7
	5U5-11	96	2-0	1-11½								593
	5U5-6	96	2-0	1-9								551
	4A13-5	4										36
	4A13-1	8										35
	4A12-9	4										34
	4A11-11	4										32
	4A10-5	4										28
	4A 9-8	4										26
	4A 8-3	4										22
	4A7-7	4										20
	4A6	4										16
	4A5-6	4										15
	4A3-7	4										10
											Total Abut.#1 Rt. Ln.	2672
											Total Abut.#1 Lt. Ln.	2672
	ABUTMENT Nº2 RIGHT LANE											
	11A28-6	7										1060
	11A16	4										340
	11J26-3	6								24-B		837
	11J25-9	6								24-2		821
	9A23	60										4692
	9A21-9	40										2958
	9J5-10	60								4-7		1137
	8A17-B	3										182
	8A17-2	3										138
	8A14-6	4										155
	8B14-10	20								12-B		792
	8B 7-7	44								5-5		890
	6A30-4	4										182
	6B9-4	8								8-0		112
Girders Ties	5G 12-1	51	2-1½	3-7½								643
	5G 20-10	2	1-6½	8-10½								43
	5G 20-4	2	1-6½	8-4½								43
	5G 19-10	2	1-6½	8-1½								42
	5G 19-4	2	1-6½	7-10½								40
	5G 18-10	2	1-6½	7-7½								39
	5G 18-4	2	1-6½	7-4½								38
	5G 17-10	2	1-6½	7-1½								37
	5G 17-4	2	1-6½	6-10½								36
	5G 16-10	2	1-6½	6-7½								35
	5G 16-4	2	1-6½	6-4½								34
	5G 15-10	2	1-6½	6-1½								33
	5G 15-4	2	1-6½	5-10½								32
	5G 14-10	2	1-6½	5-7½								31
	5G 14-4	2	1-6½	5-4½								30
	5G 13-10	2	1-6½	5-1½								29
	5G 13-4	2	1-6½	4-10½								28
	5G 12-10	2	1-6½	4-7½								27
	Cont. in next Column.											

ITEM: PROJECT: PAGE ____ OF ____

LOCATION	BAR MARK	NO. REQD	a	b	c	e	f	g	h	o	r	WEIGHT
Abutment #2 Rt. Ln. Cont.	5G 12-4	2	1-6½	4-4½								26
	5G 11-10	2	1-6½	4-1½								25
	5G 11-4	2	1-6½	3-10½								24
	5G 10-10	2	1-6½	3-7½								23
	5G 10-4	2	1-6½	3-4½								22
	5G 9-10	2	1-6½	3-1½								21
	5G 9-4	2	1-6½	2-10½								20
	5G 8-10	2	1-6½	2-7½								18
	5G 8-4	2	1-6½	2-4½								17
	5G 7-10	2	1-6½	2-1½								16
Wing Walls	5A3-10	6										24
	5A3-9	6										24
	5A3-7	6										23
	5A3-5	4										14
	5A3-1	2										6
	5A3	56										175
	5A2-11	6										18
	5A2-10	4										12
	5A2-8	2										6
	5A2-5	2										5
	5A2-4	2										5
	5A2-2	4										9
	5A1-11	4										8
	5A1-7	2										3
	4A13-5	2										18
	4A13-1	4										35
	4A12-9	2										17
	4A11-11	2										16
	4A10-5	2										14
	4A 9-8	2										13
	4A 8-3	2										11
	4A7-7	2										10
	4A6	2										8
	4A5-6	2										7
	4A3-7	2										5
											Total-Abut. Nº2 Rt. Ln.	16,246
	ABUTMENT Nº2 LEFT LANE											
	11A28-6	7										
	11A16	4										
	11J26-3	6								24-B		B37
	11J25-9	6								24-2		B21
	9A30-1	22										2250
	9A19-7	20										1331
	9J5-10	42								4-7		833
	8A17-B	3										182
	8A17-2	3										138
	8A14-6	4										155
	8B12-10	10								10-B		243
	8B11-1	10								8-11		296
	8B7-7	35								5-5		708
	6A30-4	4										182
	6B9-4	8								8-0		112
Girders Ties	5G 12-1	51	2-1½	3-7½								643
	5G 16-10	1	1-6½	6-7½								18
	5G 16-4	1	1-6½	6-4½								17
	5G 15-10	1	1-6½	6-1½								17
	5G 15-4	1	1-6½	5-10½								16
	5G 14-10	1	1-6½	5-7½								16
	5G 14-4	1	1-6½	5-4½								15
	5G 13-10	1	1-6½	5-1½								15
	5G 13-4	2	1-6½	4-10½								28
	5G 12-10	2	1-6½	4-7½								27
	5G 12-4	2	1-6½	4-4½								26
	5G 11-10	2	1-6½	4-1½								25
	5G 11-4	2	1-6½	3-10½								24
	5G 10-10	2	1-6½	3-7½								23
	5G 10-4	2	1-6½	3-4½								22
Cont. on next Column.												

ITEM: PROJECT: PAGE ____ OF ____

LOCATION	BAR MARK	NO. REQD	a	b	c	e	f	g	h	o	r	WEIGHT
Abutment Nº2 Left Lane Cont.	5G 9-10	2	1-6½	3-1½								21
	5G 9-4	2	1-6½	2-10½								20
	5G 8-10	2	1-6½	2-7½								18
	5G 8-4	2	1-6½	2-4½								17
	5G 7-10	2	1-6½	2-1½								16
Wing Walls	5A3-10	6										24
	5A3-9	6										24
	5A3-7	6										23
	5A3-5	4										14
	5A3-1	2										6
	5A3	56										175
	5A2-11	6										18
	5A2-10	4										12
	5A2-8	2										6
	5A2-5	2										5
	5A2-4	2										5
	5A2-2	4										9
	5A1-11	4										8
	5A1-7	2										3
	4A13-5	2										18
	4A13-1	4										35
	4A12-9	2										17
	4A11-11	2										16
	4A10-5	2										14
	4A 9-8	2										13
	4A 8-3	2										11
	4A7-7	2										10
	4A6	2										8
	4A5-6	2										7
	4A3-7	2										5
											Total Abut. LEFT LANE	11,058
	PIERS Nos. 1, 2 & 3 RIGHT & LEFT LANES											
	(One Sixth ⅙ each pier except as noted.)											
Pier #2 Rt. Ln.	9A28	68										
Pier #2 Lt. Ln.	9A28	68										
Pier #3 Rt. Ln.	9A27-9	68										
Pier #3 Lt. Ln.	9A27-9	68										
Pier #1 Rt. Ln.	9A27-6	68										
Pier #1 Lt. Ln.	9A27-6	68										
	9J5-10	204										
	8A32-10	54										
	8B8-1	264										
	8J20-4	60										
Pier #1 Rt. Ln.	6A32-10	2										99
Pier #1 Lt. Ln.	6A32-10	2										99
Pier #3 Rt. Ln.	6A32-10	2										99
Pier #3 Lt. Ln.	6A32-10	2										99
	5FX19-11	12	3-10⅜	2-1⅜	3-0⅜					6-0½	1-11	249
	5FX19-8	12	3-10½	2-1⅜	3-0⅜					5-10½	1-10½	246
	5FX19-3	12	3-9⅜	2-0⅞	2-11½					5-9	1-10	241
	5FX18-11	12	3-9½	2-0⅜	2-10½					5-7½	1-9½	237
	5FX18-7	12	3-8⅜	1-11⅞	2-9⅜					5-6	1-9	233
	5FX18-3	12	3-8½	1-11⅞	2-9					5-4½	1-8½	228
	5FX17-11	12	3-7⅜	1-10⅞	2-8⅜					5-2⅜	1-8	224
	5FX17-7	12	3-7½	1-10⅞	2-7⅞					5-1½	1-7½	220
	5FX17-4	12	3-6⅞	1-10⅞	2-7⅜					4-11½	1-7	217
	5FX16-11	12	3-6½	1-9⅞	2-6½					4-10	1-6½	212
	5FX16-7	12	3-5⅞	1-8⅞	2-5½					4-8½	1-6	208
	5FX16-4	12	3-5½	1-8 5/16	2-5½					4-7	1-5½	204
	5FX16	12	3-4⅞	1-8⅞	2-4½					4-5½	1-5	200
	5FX15-7	12	3-4½	1-7⅞	2-3⅞					4-3⅞	1-4½	195
	5FX15-3	12	3-3⅞	1-6 15/16	2-2⅞					4-2½	1-4	191
	5FX15	12	3-3½	1-6⅞	2-2⅞					4-0⅞	1-3½	188
	5FX14-7	12	3-2½	1-5⅞	2-1⅞					3-11	1-3	183
	5FX14-4	12	3-2½	1-5 15/16	2-1					3-9½	1-2½	179
	5FX14	12	3-1⅞	1-5⅞	2-0½					3-8	1-2	175
	5FX13-8	12	3-1½	1-4⅞	1-11½					3-6½	1-1⅞	171
Cont. on Reinf. Steel Schedule Nº2												

ITEM: BENDING DIAGRAMS

FED. ROAD DIST.	STATE	FEDERAL AID PROJECT No.	FISCAL YEAR	SHEET No.	TOTAL SHEETS
3	TENN	I-40-5(9)264		144	322

Bending diagrams shown with symbols for variable dimensions are standard types of bars. Some types shown may not be billed in the attached lists. All bars "Mark A" are straight.

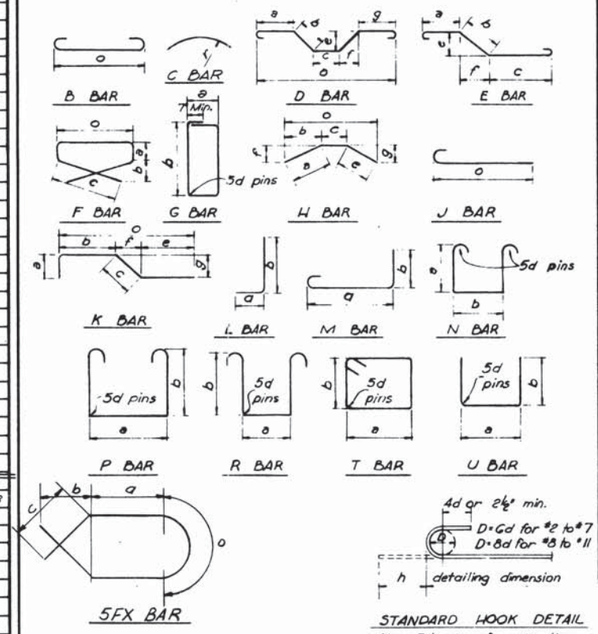

STANDARD HOOK DETAIL

Use 5d pins for all other bars as indicated

Notes:

1. The figures to the left of the letter, or letters, represents the bar size number -- 4 = ½"; 5 = ⅝"; 6 = ¾" etc.
2. The letter represents the type of bar - A, H, J, etc. Special type bars are designated by letters "XA", etc. Bars of same type and same length, but different bends are marked La, Lb, Ka, Kb, etc.
3. The figures to the right of the letter, or letters, represent the length in feet and inches, 10-3, 12-6, etc. Thus a bar, Mark 6E21-3, represents a No. 6 bar, type E, 21'-3" long. For bar lengths in even feet, the dash and zero (- and 0) are omitted.
4. Dimensions are out-out.

MID-SOUTH ENGINEERING CO., INC.
620 BROADWAY, N.E. KNOXVILLE, TENNESSEE

BRIDGE OVER CANEY FORK RIVER-RIVER MILE 207
STA. 518+50 RIGHT (6A) LEFT (6B) LANES

REINFORCING STEEL SCHEDULE NO. 1

STATE OF TENNESSEE
DEPARTMENT OF HIGHWAYS AND PUBLIC WORKS
NASHVILLE

DR. L.E.S. CHK'D R.A.H. APP'D W.R. DATE 11-16-59

G-15-136

ITEM: PROJECT: PAGE ____ OF ____

LOCATION	BAR MARK	NO. REQD	BENDING DIMENSIONS - FEET & INCHES a	b	c	e	f	g	h	o	r	WEIGHT
	CONT		PIERS 1, 2, & 3 RIGHT & LEFT LANES									
	5FX13-3	12	3-0 3/8	1-4 3/16	1-10 5/8					3-9 3/8	1-1	166
	5FX13	12	3-0 1/4	1-3 5/8	1-10 5/8					3-3 1/4	1-0 5/8	163
	5FX12-8	12	2-11 3/8	1-2 15/16	1-9 5/8					3-1 3/8	1-0	159
	5FX12-4	12	2-11 1/8	1-2 11/16	1-8 5/8					3-0	0-11 1/2	154
	5FX11-11	12	2-10 3/4	1-2 5/8	1-8					2-10 3/4	0-11	149
Pier #1 Rt. Ln	5U8	208	3-0	2-6								1702
Pier #1 Lt. Ln.	5U3-9	17	1-3	1-3								66
Pier #3 Rt. Ln	5U3-9	17	1-3	1-3								66
Pier #3 Lt. Ln.	5U3-9	17	1-3	1-3								66
	5U3-9	17	1-3	1-3								66
	4A27-6	300										5511
Pier #2 Rt. Ln.	4A27-3	100										1820
Pier #2 Lt. Ln.	4A27-3	100										1820
Pier #3 Rt. Ln.	4A27	100										1804
Pier #3 Rt. Ln.	4A27	100										1804
Pier #1 Rt. Ln.	4A26-9	100										1787
Pier #1 Lt. Ln.	4A26-9	100										1787
	4A25-6	312										5515
	4J1-4	288								3-10		833
					Total Pier #1 Right Lane							14,303
					Total Pier #1 Left Lane							14,303
					Total Pier #2 Right Lane							14,308
					Total Pier #2 Left Lane							14,308
					Total Pier #3 Right Lane							14,399
					Total Pier #3 Right Lane							14,399
										Total		86,020
	SUPPER STRUCTURE											
	(2 of bars for each bridge (6A & 6B))											
	5A2-10	68										192
	5L3-4	68	1-8	1-8								222
	5XA5-4	1920	"	"		"	"					10,672
	4A27-5	688										12608
	4A24-8	516										8503
	4A2-8	32										57
	4A2-5	16										26
	4B33-5	960										21,432
	4DZ34A	952		See Bending Diagram								21332
					Total Bridge 6A Rt. Ln							
					Total Bridge 6B Lt. Ln.							
	48" PRESTRESSED BOX GIRDERS											
	(Reinf. furnish by girder supplier.)											
dowels	GA1-6	128										577
	4A30-6	576										11,735
	4A29-10	576										9,169
	4U5-9	15,360	3-9	1-0								58,998
	4UX11	2880	See Bending Diagram Drw. G-15-139									21,162
	4UX96	2240										16,215
					Total Rt. Ln. & Lt. Ln.							115,856

ITEM: PROJECT: PAGE ____ OF ____

LOCATION	BAR MARK	NO. REQD	BENDING DIMENSIONS - FEET & INCHES a	b	c	e	f	g	h	o	r	WEIGHT

ITEM: PROJECT: PAGE ____ OF ____

LOCATION	BAR MARK	NO. REQD	BENDING DIMENSIONS - FEET & INCHES a	b	c	e	f	g	h	o	r	WEIGHT

ITEM: BENDING DIAGRAMS

FED. ROAD DIST.	STATE NAME	FEDERAL AID PROJECT No.	FISCAL YEAR	SHEET No.	TOTAL SHEETS
3	TENN	I 40-5(9)264		145	372

Bending diagrams shown with symbols for variable dimensions are standard types of bars. Some types shown may not be billed in the attached lists. All bars "Mark A" are straight.

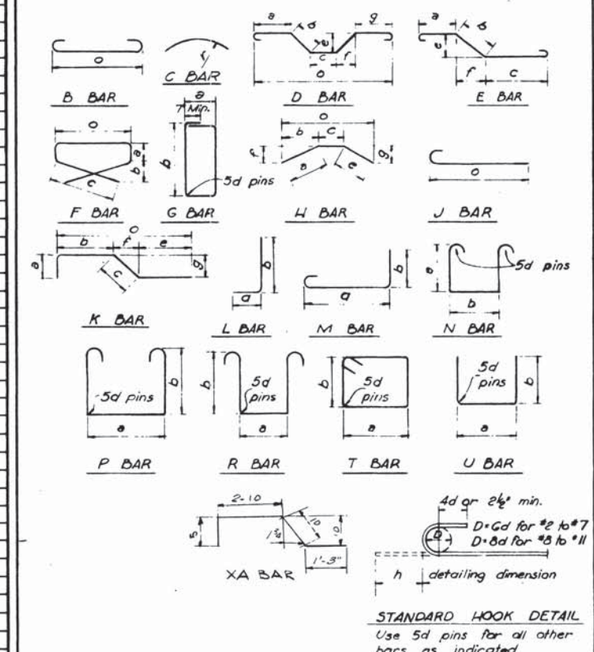

STANDARD HOOK DETAIL

Use 5d pins for all other bars as indicated

Notes:

1. The figures to the left of the letter, or letters, represents the bar size number -- 4 = ½"; 5 = ⅝"; 6 = ¾" etc.
2. The letter represents the type of bar - A, H, J, etc. Special type bars are designated by letters "XA", etc. Bars of same type and same length, but different bends are marked La, Lb, Ka, Kb, etc.
3. The figures to the right of the letter, or letters, represent the length in feet and inches, 10-3, 12-6, etc. Thus a bar, Mark GE21-3, represents a No. 6 bar, type E, 21'-3" long. For bar lengths in even feet, the dash and zero (- and 0) are omitted.
4. Dimensions are out-out.

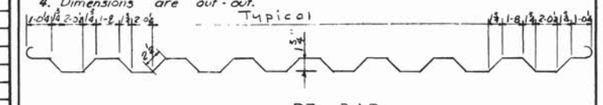

DZ BAR

MID-SOUTH ENGINEERING CO., INC.
820 BROADWAY, N.E. KNOXVILLE, TENNESSEE

BRIDGE OVER CANEY FORK RIVER - RIVER MILE 207
STA. 518+50 RIGHT (6A) LEFT (6B) LANES

REINFORCING STEEL SCHEDULE NO. 2

STATE OF TENNESSEE
DEPARTMENT OF HIGHWAYS
AND PUBLIC WORKS
NASHVILLE

DR. L.E.S.
CHK'D R.A.H.
APP'D W.R.
DATE 11-16-59

G-15-137